DBJ ELECTRIC DOUBLE LAYER CAPACITORS "DYNACAP"

ELNA

5.5V Low Profile and High Temperature Capacitors

GREEN CAP | 85°C

- High temperature type of series DB.
- Small-sized, large capacity, excellent voltage holding.
- For all ratings, uniform 5mm pitch of terminal spacing.
- φ13.5×7.5Lmm size can encase up to 0.33F.
- Ideal for backing up of CMOS's, IC's of camera, microcomputers, RAM's, RTC's and the like used in audio, general electronic device, and others.

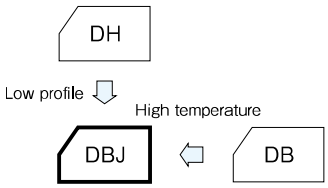

Marking color : White print on a black sleeve

Specifications

Item	Performance
Category temperature range (℃)	−10 to +85
Tolerance at rated capacitance (%)	−20 to +80
Internal resistance at 1 kHz	

Rated capacitance (F)	0.047	0.1	0.22	0.33	0.47	1
Internal resistance (Ω Max.)	200	150	150	150	100	75

Characteristics at high and low temperature	
Percentage of capacitance change	Within ±30% of the value at 20℃
Internal resistance	Four times or less of the initial specified value.

Endurance (85℃)	
Test time	1000 hours
Percentage of capacitance change	Within ±30% of the initial measured value
Internal resistance	Four times or less of the initial specified value

Shelf life (85℃)	Test time : 1000 hours ; Same as endurance.
Applicable standards	Conforms to JIS C5160 - 1 (IEC 6239 - 1)

Outline Drawing

Unit : mm

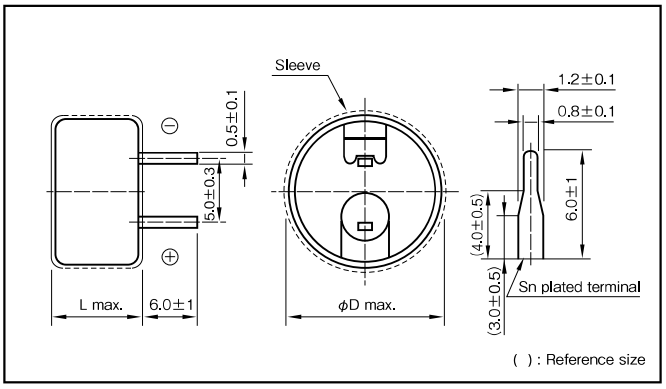

Part numbering system (example : 5.5V0.22F)					
DBJ	—	5R5	D	224	T
Series code		Max.operating voltage symbol		Rated capacitance symbol	

Part number is refer to following table.

Standard Ratings

Max. operating voltage (V)	Rated capacitance (F)	ELNA Parts No.	φD×L (mm)
5.5	0.047	DBJ-5R5D473T	13.5×7.5
5.5	0.1	DBJ-5R5D104T	13.5×7.5
5.5	0.22	DBJ-5R5D224T	13.5×7.5
5.5	0.33	DBJ-5R5D334T	13.5×7.5
5.5	0.47	DBJ-5R5D474T	21.5×8.0
5.5	1	DBJ-5R5D105T	21.5×8.0

NOTE : Design, Specifications are subject to change without notice.
It is recommended that you shall obtain technical specifications from ELNA to ensure that the component is suitable for your use.