晶采光電科技股份有限公司
AMPIRE CO., LTD.

SPECIFICATIONS FOR LCD MODULE

CUSTOMER	
CUSTOMER PART NO.	
AMPIRE PART NO.	AM-1280800QTZQW-00H
APPROVED BY	
DATE	

☐Approved For Specifications
☐**Approved For Specifications & Sample**

AMPIRE CO., LTD.
4F., No.116, Sec. 1, Xintai 5th Rd., Xizhi Dist., New Taipei City221, Taiwan (R.O.C.)
新北市汐止區新台五路一段 **116** 號 **4** 樓**(**東方科學園區 **A** 棟**)**
TEL:886-2-26967269 , FAX:886-2-26967196 or 26967270

APPROVED BY	CHECKED BY	ORGANIZED BY

RECORD OF REVISION

Revision Date	Page	Contents	Editor
2016/12/08	--	New Release	Raymond
2017/12/13	17,18	Modify Outline Dimension	Raymond

1. GENERAL DESCRIPTION

The screen format is intended to support 1280H) x 800(V)screen and 16.7M(RGB 8-bits)。

1.1 Display Characteristics

The following items are characteristics summary on the table under 25 ℃ condition:

Item	Specifications	unit
Screen Diagonal	12.1	inch
Display resolution(dot)	1280 (RGB) x 800	dots
Display area	261.1 (W) x 163.2 (H)	mm
Pixel pitch	0.204(W) x 0.204 (H)	mm
Color configuration	R.G.B Vertical stripe	
Overall dimension	278.0(W)x184.0(H)x9.5(D)	mm
Display Mode	SFT, Normally Black	
Brightness	450	cd/m^2
Backlight unit	LED	
Display color	16.7M	colors
Electircal Treatment	1 channel LVDS	
Surface Treatment	Anti-glare	

Note 1: Viewing direction for best image quality is different from TFT definition, there is a 180 degree shift.

Note 2 : Requirements on Environmental Protection: Q/S0002

Note 3 : LCM weight tolerance : ±5%

2. Input/Output Terminals

2.1 TFT LCD Panel

Mating Connector: 093G30-B0001A-G4(Starconn) or compatible

Pin	Name	I/O	Description
1	VLED	P	Backlight power supply +12V
2	VLED	P	Backlight power supply +12V
3	VLED	P	Backlight power supply +12V
4	VLED	P	Backlight power supply +12V
5	VLED_EN	P	Backlight on/off control
6	VLED_PWM	P	Backlight dimming control
7	GND	P	Power ground
8	GND	P	Power ground
9	VDD	P	Power Supply +3.3V
10	VDD	P	Power Supply +3.3V
11	GND	P	Power ground
12	GND	P	Power ground
13	Rxin0-	I	-LVDS differential data input(R0~R5,G0)
14	Rxin0+	I	+LVDS differential data input(R0~R5,G0)
15	GND	P	Power ground
16	Rxin1-	I	-LVDS differential data input(G1~G5,B0~B1)
17	Rxin1+	I	+LVDS differential data input(G1~G5,B0~B1)
18	GND	P	Power ground
19	Rxin2-	I	-LVDS differential data input(B2~B5,-,-,DE)
20	Rxin2+	I	+LVDS differential data input(B2~B5,-,-,DE)
21	GND	P	Power ground
22	RxCLK-	I	-LVDS differential data input
23	RxCLK+	I	+LVDS differential data input
24	GND	P	Power ground
25	Rxin3-	I	-LVDS differential data input(R6~R7,G6~G7,B6~B7)
26	Rxin3+	I	+LVDS differential data input(R6~R7,G6~G7,B6~B7)
27	GND	P	Power ground
28	NC	-	No Connection
29	GND	P	Power ground
30	GND	P	Power ground

Note: I/O definition:
I-----Input P----Power/Ground

3 Absolute Maximum Ratings

3.1 Driving TFT LCD Panel

GND=0V

Item	Symbol	MIN	MAX	Unit	Remark
Voltage Input	Vin	-0.5	5.0	V	Note1
Operation Temperature	TOP	-20	70	℃	
Storage Temperature	TST	-30	80	℃	
Relative Humidity (Note2)	RH	--	≦95	%	Ta≦40℃
		--	≦85	%	40℃<Ta≦50℃
		--	≦55	%	50℃<Ta≦60℃
		--	≦36	%	60℃<Ta≦70℃
		--	≦24	%	70℃<Ta≦80℃
Absolute Humidity	AH	--	≦70	g/m^3	Ta>70℃

Table 3.1 absolute maximum rating

Note1: Input voltage include Rxin0-/+, Rxin1-/+, Rxin2-/+, Rxin3-/+, RxCLK-/+, SEL6/8,VDD.

Note2: Ta means the ambient temperature.It is necessary to limit the relative humidity to the specified temperature range. Condensation on the module is not allowed.

4. ELECTRICAL CHARACTERISTICS

4.1 Driving TFT LCD Panel

VCC=3.3V,GND=0V, Ta=25℃

Item		Symbol	Min	Typ	Max	Units	Remark
Power supply Voltage		VDD	3.0	3.3	3.6	V	
Power supply ripple		V_{P-P}	-	-	100	mV	
Power supply current		I_{DD}	-	TBD	-	mA	
Power comsumption		P	-	TBD	-	mW	Note 1
Differential input voltage		｜Vid｜	200	-	600	mV	
Differential input common voltage		Vcm	-	1.2	-	V	
Differential input threshold voltage	Low level	VTL	-100	-	-	mV	
	Hight level	VTH	-	-	100	mV	
Inrush Current		I_{rush}	--	--	1.5	A	

Table 4.1 LCD module electrical characteristics

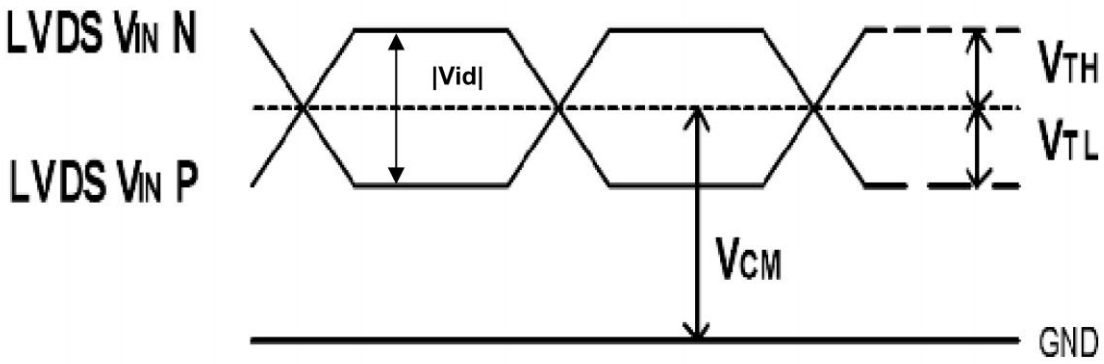

Fig 4.1 LVDS characteristics

Note1: To test the current dissipation, using the “white pattern” shown.

4.2 Driving Backlight

Input signals shall be low or Hi-Z state when VDD is off.

Item		Symbol	Min.	Typ.	Max	Unit	Remark
Backlight power supply voltage		VLED	10	12	15	V	
Backlight power supply current		ILED	-	TBD	-	mA	
Backlight power consumption		PLED	-	TBD	-	mW	
Input voltage for VLED_PWM signal	High level	-	2.0	-	5.0	V	
	Low level	-	0	-	0.4	V	
Input voltage for VLED_EN	High level	-	2.0	-	5.0	V	
	Low level	-	0	-	0.4	V	
VLED_PWM frequency		Fpwm	200	-	20K	Hz	
VLED_PWM duty		D	1	-	100	%	Note 1
Operating Life Time		-	50000	-	-	hrs	Note 2

Note 1: According to LED driver IC characteristics, the minimum value of VELD_PWM duty may vary with VLED_PWM frequency, higher the frequency, bigger the duty.

Note 2: Optical performance should be evaluated at Ta=25℃ only.

Note 3: If LED is driven by high current, high ambient temperature & humidity condition. The life time of LED will be reduced.

Note 4: Operating life means brightness goes down to 50% of initial brightness. Typical operating life time is estimated data.

5 Timing Chart

5.1 LVDS signal timing characteristics

VCC=3.3V, GND=0V, Ta=25℃

Parameter	Symbol	Min	Typ	Max	Unit
CLK frequency	$1/t_C$	67	71	75	MHz
Horizontal display area	thd	-	1280	-	tc
Horizontal period	th	1290	1440	-	tc
Vertical display area	tvd	-	800	-	th
Vertical period	tv	810	823	-	th
Frame Rate	F	-	60	-	HZ

5.2 Input Clock and Data timing Diagram:

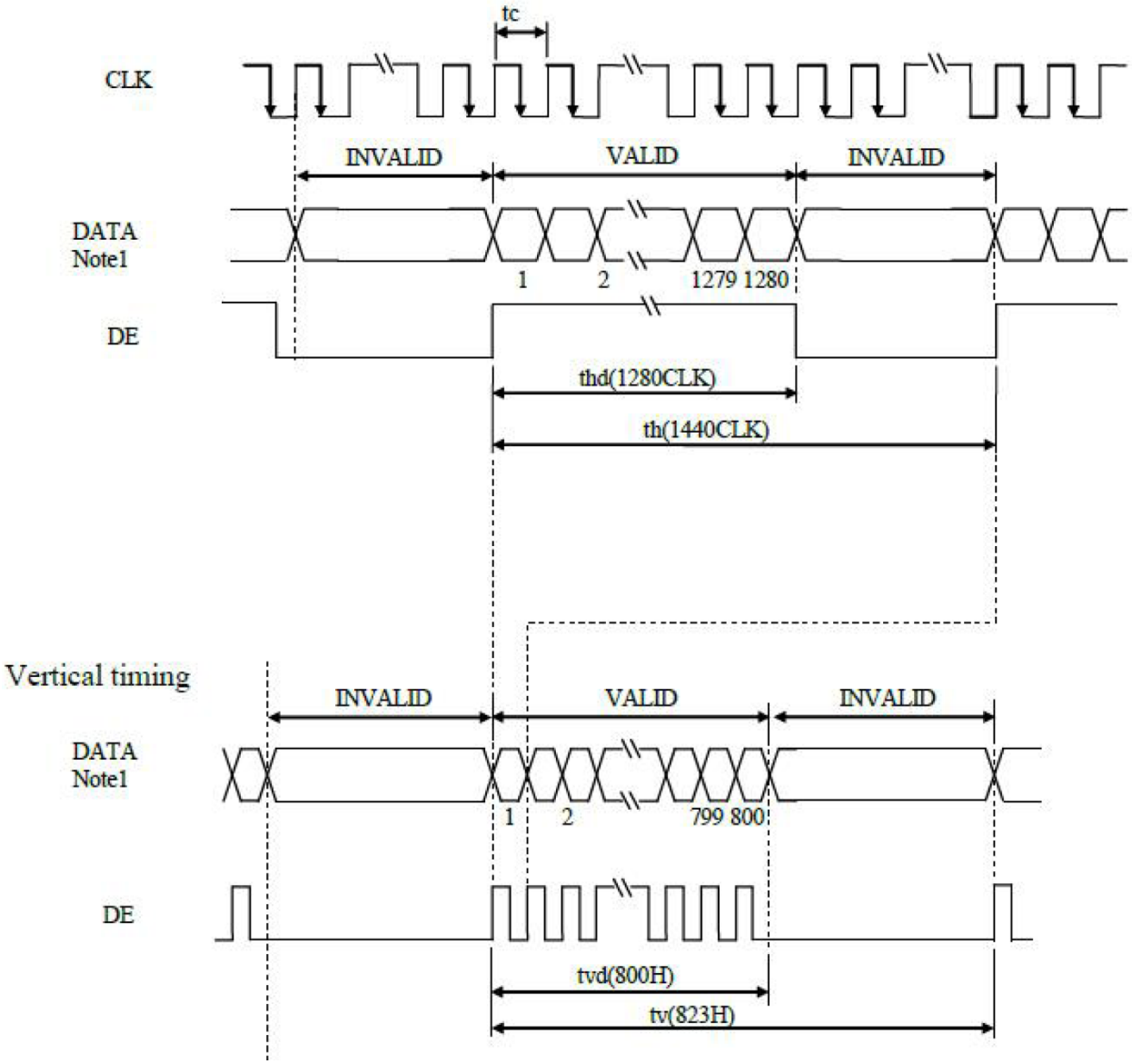

Figure 5.2 Input signal data timing

5.3 LVDS data input format

8-bit mode data input

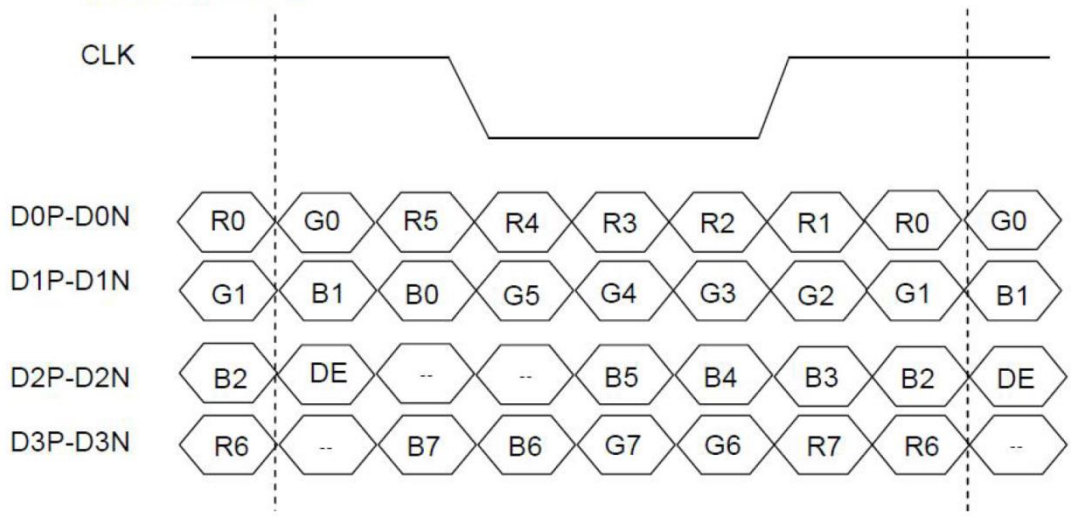

Figure 5.3 LVDS data input format

5.4 Power On/Off Sequence

Item	Symbol	Min	Typ	Max	Unit
VDD on to VDD stable	Tp1	0.5	-	10	ms
VDD stable to signal on	Tp2	0	-	50	ms
Signal on to VLED_EN on	Tp3	200	-	-	ms
PWM on to VLED_EN on	Tp4	0	-	200	ms
VLED to PWM on	Tp5	10	-	-	ms
VLED on to VELD stable	Tp6	0.5	-	10	ms
VDD off time	Tp7	0	-	10	ms
VDD off to next VDD on	Tp8	500	-	-	ms
Signal off before VDD off	Tp9	0	-	50	ms
VLED_EN off before signal off	Tp10	200	-	-	ms
VLED_EN off before PWM off	Tp11	0	-	200	ms
PWM off before VLED off	Tp12	10	-	-	ms

Table 5.4 Power on/off sequence

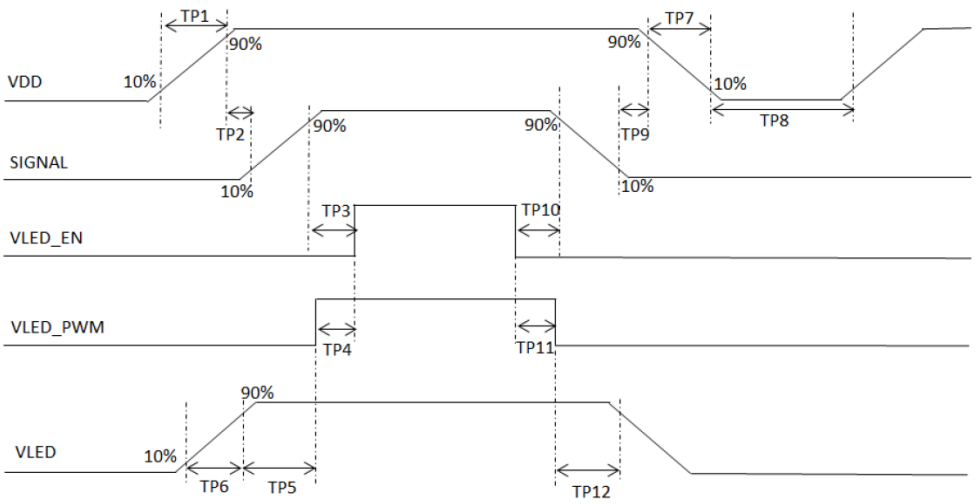

Figure 5.4 Interface power on/off sequence

6 Optical specification

6.1 Optical characteristic of the LCD

Item		Symbol	Condition	Min.	Typ.	Max.	Unit	Remark
View Angles		θT	CR≧10	75	85	--	Degree	Note 2
		θB		75	85	--		
		θL		75	85	--		
		θR		75	85	--		
Contrast Ratio		CR	θ=0°	800	1000	--		Note 1 Mote 3
Response Time		T_{ON}	25℃	--	12	--	ms	Note 1 Note 4
		T_{OFF}		--	13	--		
Chromaticity	White	X	Backlight is ON	0.236	0.313	0.363	--	Note 1 Note 5
		Y		0.279	0.329	0.379		
	Red	X		--	--	--		
		Y		--	--	--		
	Green	X		--	--	--		
		Y		--	--	--		
	Blue	X		--	--	--		
		Y		--	--	--		
Uniformity		U		70	75	--	%	Note 1 Note 6
NTSC				--	50	--	%	Note 5
Luminance		L		360	450	--	Cd/m^2	Note 1 Note 7

Test Conditions:

1. The ambient temperature is 25±2℃.humidity is 65±7%
2. The test systems refer to Note1 and Note 2.

Note 1: Definition of optical measurement system.
The optical characteristics should be measured in dark room. After 5 minutes operation, the optical properties are measured at the center point of the LCD screen. All input terminals LCD panel must be ground when measuring the center area of the panel.

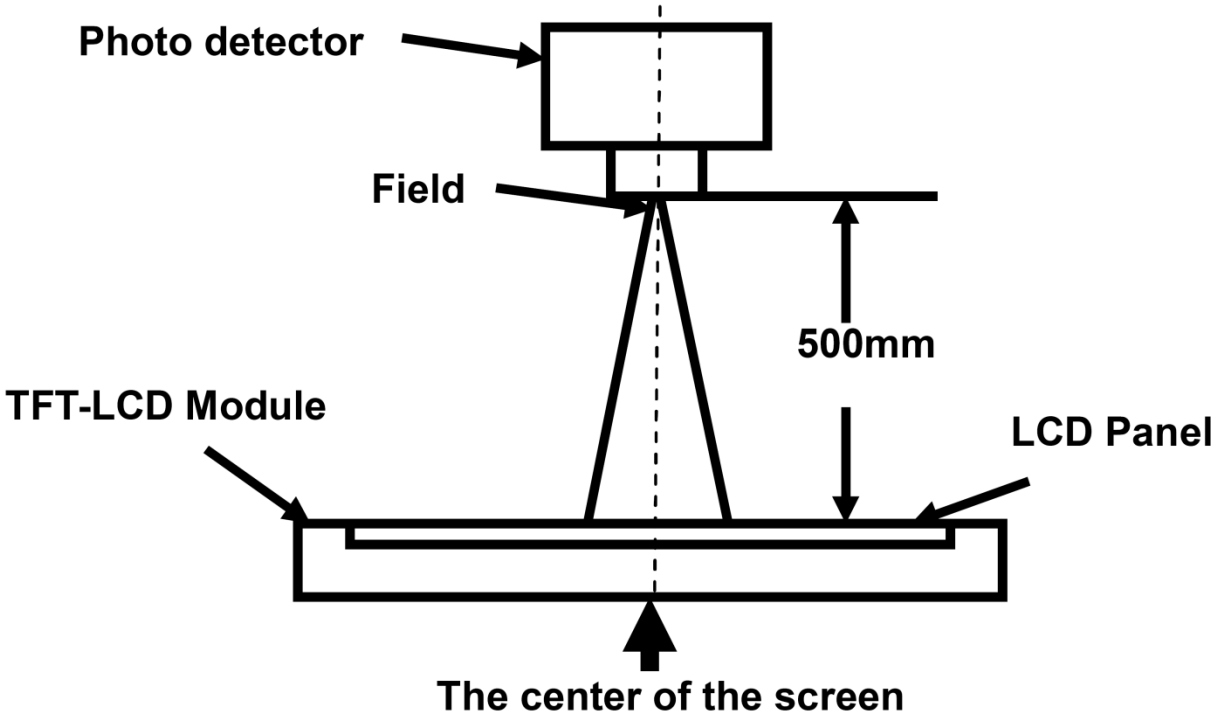

Note 2: Definition of viewing angle range and measurement system.
viewing angle is measured at the center point of the LCD by CONOSCOPE (ergo-80)。

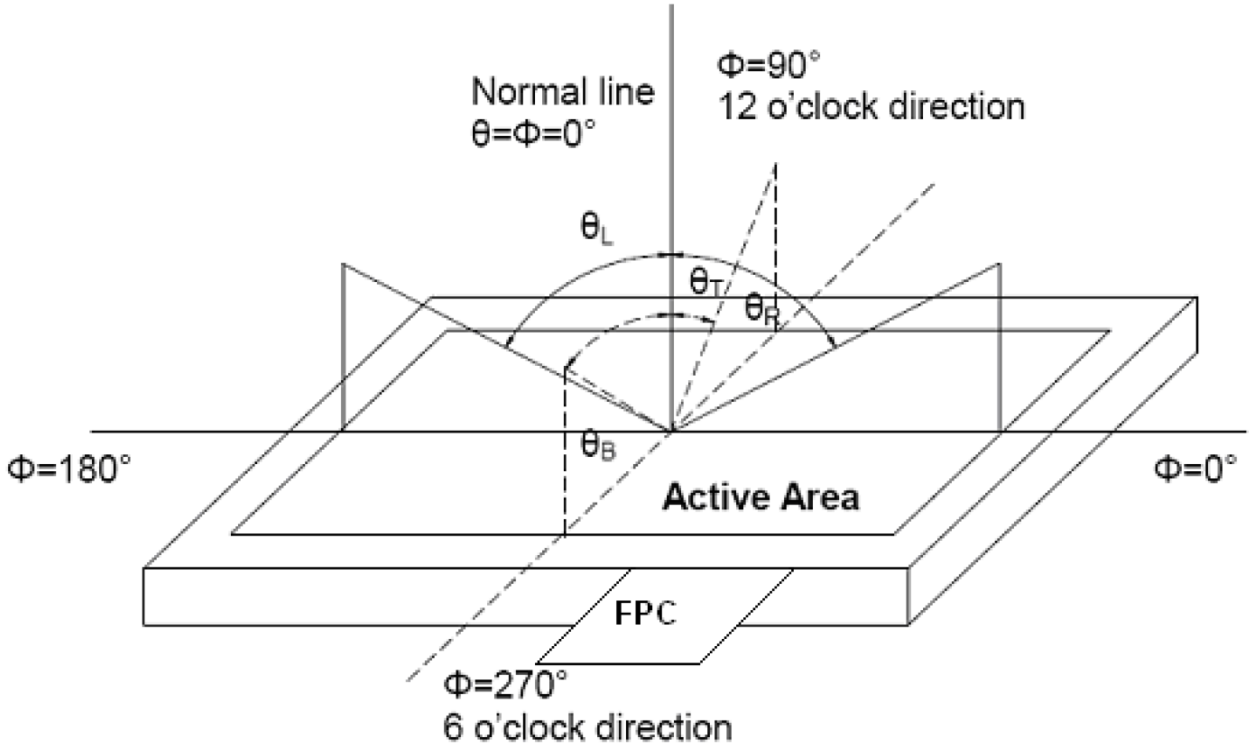

Fig. 1 Definition of viewing angle

Note 3: Definition of contrast ratio

$$\text{Contrast ratio(CR)} = \frac{Luminance\ measured\ when\ LCD\ is\ on\ the\ \text{"White"}\ state}{Luminance\ measured\ when\ LCD\ is\ on\ the\ "Black"\ state}$$

"White state ": The state is that the LCD should driven by V_{white}.

"Black state": The state is that the LCD should driven by V_{black}.

V_{white}: To be determined V_{black}: To be determined.

Note 4: Definition of Response time

The response time is defined as the LCD optical switching time interval between "White" state and "Black" state. Rise time (T_{ON}) is the time between photo detector output intensity changed from 90% to 10%. And fall time (T_{OFF}) is the time between photo detector output intensity changed from 10% to 90%.

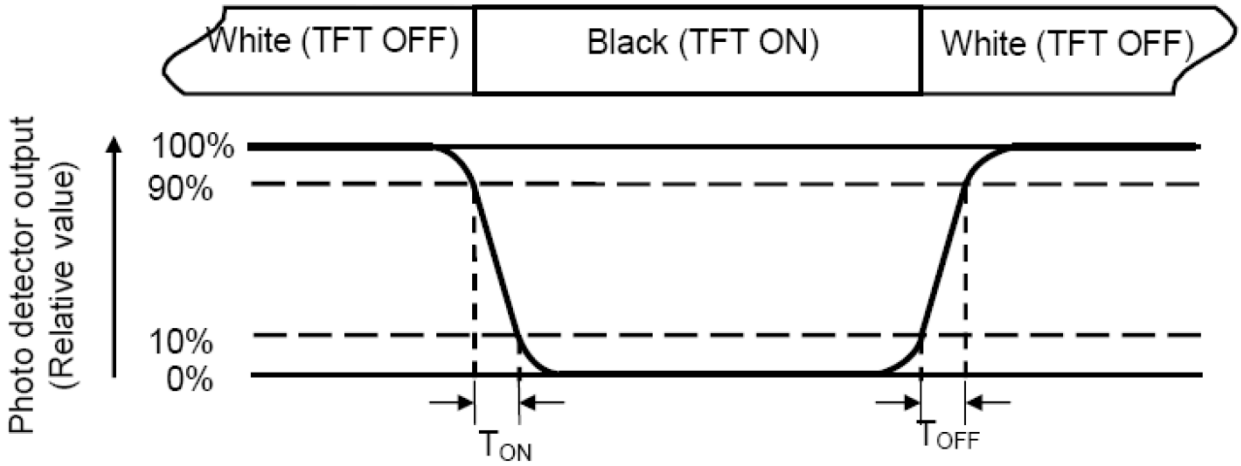

Note 5: Definition of color chromaticity (CIE1931)

Color coordinates measured at center point of LCD.

Note 6: Definition of Luminance Uniformity

Active area is divided into 9 measuring areas (Refer Fig. 2). Every measuring point is placed at the center of each measuring area.

$$\text{Luminance Uniformity(U)} = \frac{L_{min}}{L_{max}}$$

L-------Active area length W----- Active area width

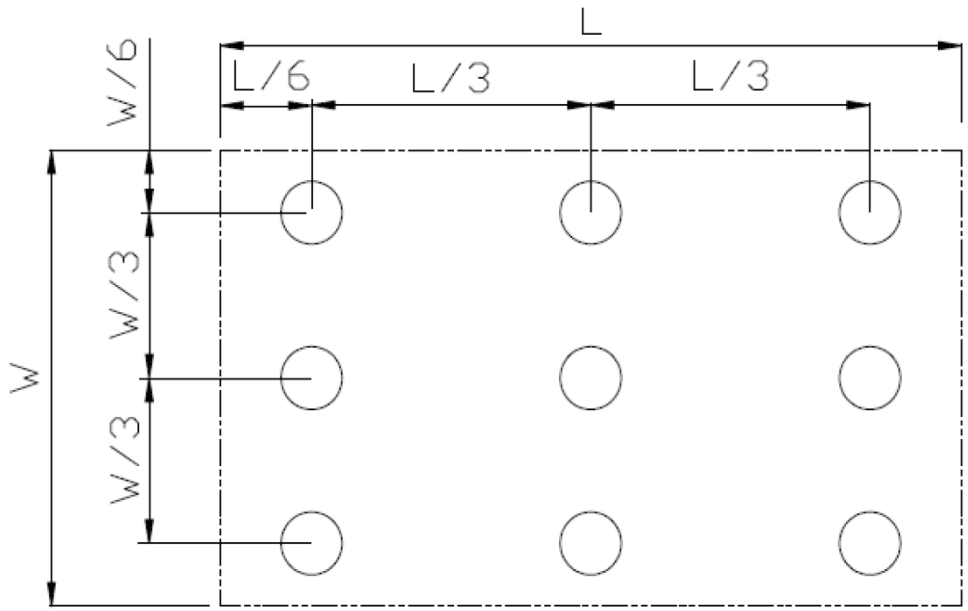

Fig. 2 Definition of uniformity

Lmax: The measured maximum luminance of all measurement position.

Lmin: The measured minimum luminance of all measurement position.

Note 7: Definition of Luminance :

Measure the luminance of white state at center point.

7 Reliability Test Items

Test Item	Test Conditions	Note
High Temperature Operation	Ts = 70°C , t=240 hrs	
Low Temperature Operation	Ta = -20°C , t=240 hrs	
High Temperature Storage	Ta = 80°C , t=240 hrs	1,2
Low Temperature Storage	Ta = -30°C , t=240 hrs	1,2
Storage at High Temperature and Humidity	Ta = 60°C, 90% RH , 240 hrs	1,2
Thermal Shock Test	-30°C (30min) ~ 80°C (30min) Change time:5min, 100 cycles	1,2
Vibration Test (Packing)	Frequency range:10～55Hz, Stroke:1.5mm Sweep:10Hz ～ 55Hz ～ 10Hz 2hours for each direction of X.Y.Z (6 hours total)	2

Note 1 : Ts is the temperature of panel's surface.

Note 2 : Ta is the ambient temperature of sample.

8 USE PRECAUTIONS

8.1 Handling Precautions

8.1.1. The display panel is made of glass. Do not subject it to a mechanical shock by dropping it from a high place, etc.

8.1.2. If the display panel is damaged and the liquid crystal substance inside it leaks out, be sure not to get any in your mouth, if the substance comes into contact with your skin or clothes, promptly wash it off using soap and water.

8.1.3. Do not apply excessive force to the display surface or the adjoining areas since this may cause the color tone to vary.

8.1.4. The polarizer covering the display surface of the LCD module is soft and easily scratched. Handle this polarizer carefully.

8.1.5. If the display surface is contaminated, breathe on the surface and gently wipe it with a soft dry cloth. If still not completely clear, moisten cloth with one of the following solvents:

- Isopropyl alcohol
- Ethyl alcohol

Solvents other than those mentioned above may damage the polarizer.
Especially, do not use the following:

- Water
- Ketone
- Aromatic solvents

8.1.6. Do not attempt to disassemble the LCD Module.

8.1.7. If the logic circuit power is off, do not apply the input signals.

8.1.8. To prevent destruction of the elements by static electricity, be careful to maintain an optimum work environment.

8.1.8.1. Be sure to ground the body when handling the LCD Modules.

8.1.8.2. Tools required for assembly, such as soldering irons, must be properly ground.

8.1.8.3. To reduce the amount of static electricity generated, do not conduct assembly and other work under dry conditions.

8.1.8.4. The LCD Module is coated with a film to protect the display surface. Be care when peeling off this protective film since static electricity may be generated.

8.2 Storage Precautions

8.2.1. When storing the LCD modules, avoid exposure to direct sunlight or to the light of fluorescent lamps.

8.2.2. The LCD modules should be stored under the storage temperature range. If the LCD modules will be stored for a long time, the recommend condition is: Temperature : 0℃ ～ 40℃ Relatively humidity: ≤80%

8.2.3. The LCD modules should be stored in the room without acid, alkali and harmful gas.

8.3 Transportation Precautions

The LCD modules should be no falling and violent shocking during transportation, and also should avoid excessive press, water, damp and sunshine.

8.4 Other

8.4.1 AMIPRE will provide one year warrantee for all products and three months warrantee for all repairing products.

8.4.2 Do not keep the LCD at the same display pattern continually. The residual image will happen and it will damage the LCD. Please use screen saver.

9. OUTLINE DIMENSION

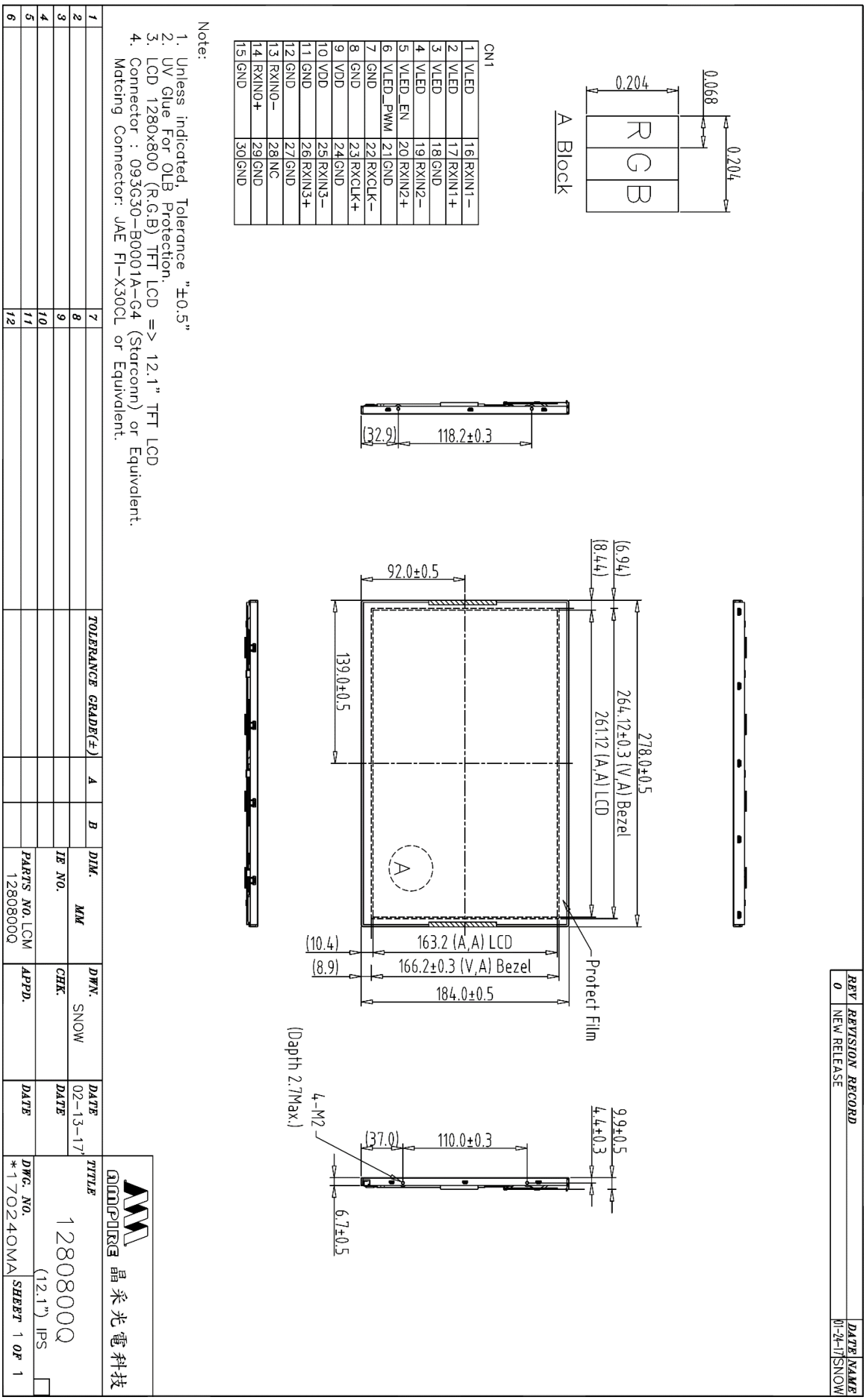

REV	REVISION RECORD	DATE	NAME
0	NEW RELEASE	02-13-17	SNOW

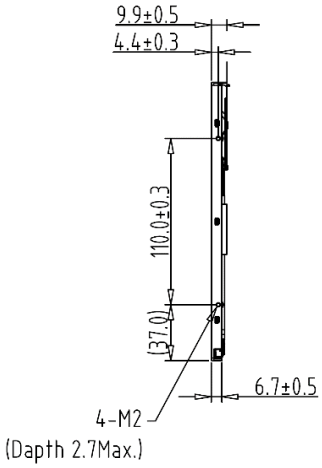

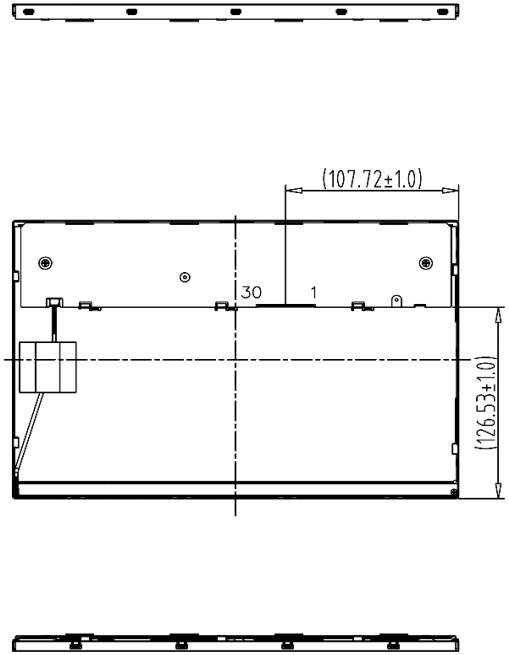

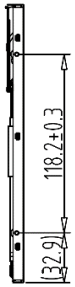

Back view

CN1

1	VLED	16	RXIN1−
2	VLED	17	RXIN1+
3	VLED	18	GND
4	VLED	19	RXIN2−
5	VLED_EN	20	RXIN2+
6	VLED_PWM	21	GND
7	GND	22	RXCLK−
8	GND	23	RXCLK+
9	VDD	24	GND
10	VDD	25	RXIN3−
11	GND	26	RXIN3+
12	GND	27	GND
13	RXIN0−	28	NC
14	RXIN0+	29	GND
15	GND	30	GND

Note:

1. Unless indicated, Tolerance "±0.5"
2. UV Glue For OLB Protection.
3. LCD 1280x800 (R.G.B) TFT LCD => 12.1" TFT LCD
4. Connector : 093G30−B0001A−G4 (Starconn) or Equivalent.
   Matcing Connector: JAE FI−X30CL or Equivalent.

AMPIRE 晶采光電科技

1		7		TOLERANCE GRADE(±)	A	B	DIM. MM	DWN. SNOW	DATE 02-13-17	TITLE 1280800Q (12.1") IPS
2		8								
3		9					IE NO.	CHK.	DATE	
4		10								
5		11					PARTS NO. LCM−1 1280800Q	APPD.	DATE	DWG. NO. *170241MA / SHEET 1 OF 1
6		12								