晶采光電科技股份有限公司
AMPIRE CO., LTD.

SPECIFICATIONS FOR LCD MODULE

CUSTOMER	
CUSTOMER PART NO.	
AMPIRE PART NO.	AM-12801024BTMQW-00H
APPROVED BY	
DATE	

☑ Approved For Specifications
☐ Approved For Specifications & Sample

AMPIRE CO., LTD.
Building A., 4F., No.116, Sec. 1, Sintai 5th Rd., Xizhi Dist,
New Taipei City 221, Taiwan (R.O.C.)
新北市汐止區新台五路一段 **116** 號 **4** 樓(東方科學園區 **A** 棟)
TEL:886-2-26967269 , FAX:886-2-26967196 or 26967270

APPROVED BY	CHECKED BY	ORGANIZED BY

RECORD OF REVISION

Revision Date	Page	Contents	Editor
2015/09/15	-	New Release	Simon

1. Features

19.0 inch Amorphous-TFT-LCD (Thin Film Transistor Liquid Crystal Display) module.
This module is composed of a 19.0” TFT-LCD panel, LCD driver and backlight unit.

2. PHYSICAL SPECIFICATIONS

Item	Specifications	Remark
LCD size	19.0 inch(Diagonal)	
Number of Pixels	1280(H) × 1024(V)	
Display mode	Normally white, TN	
Number of Colors	16.7M (6Bit+Hi-FRC)	
Pixel pitch	0.294(W) × 0.294(H)	
Active area	376.32(W) × 301.056(H)	
Module size	396 × 324 × 15.18 (typ)	
Surface treatment	Anti-Glare, 3H	
Viewing Angle	160 /140(Typ.)	
Backlight	White LED	
Color arrangement	RGB vertical strip	

3. ABSOLUTE MAXIMUM RATINGS

ITEM	SYMBOL	MIN.	MAX.	UNIT	REMARK
Power Supply Voltage for LCD	VCC	0	6.0	V	
Logic Input Voltage	VI	0	6.0	V	
Backlight Power Supply Voltage	VLED	0	15	V	
Backlight ON-OFF Voltage	LED_EN	0	6	V	
Backlight Dimming Control Input Voltage	LED_PWM	0	6	V	
Operation Temperature	Top	-30	80	℃	1). 2). 3).
Storage Temperature	Tstg	-30	80	℃	1). 2). 3).

[Note]

1). The relative humidity and temperature range are as below sketch,90%RH Max.

2).The maximum wet bulb temperature ≦39℃ and without dewing.

3).If you use the product in an environment which over the definition of temperature and humidity too long to effect the result of eye-etching.

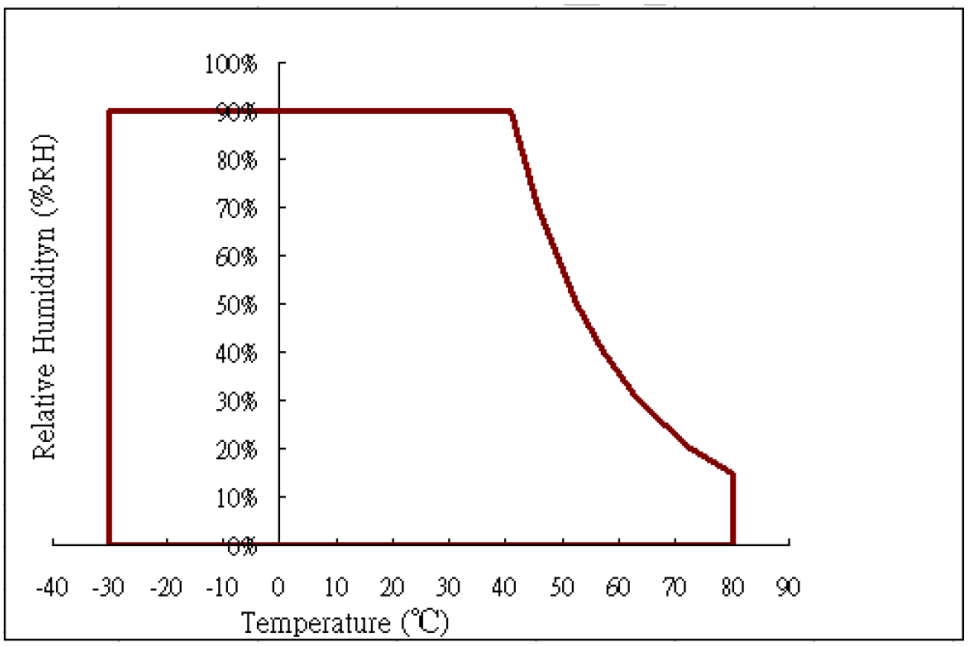

4. ELECTRICAL CHARACTERISTICS

(1).TFT-LCD

ITEM		SYMBOL	MIN	TYP	MAX	UNIT	NOTE
LCD Power Voltage		VCC	4.5	5.0	5.5	V	
LCD Power Current		ICC	-	1000	1200	mA	*1)
LCD Rush Current		VCC_Irus			2	A	*3)
Logic Input Voltage (LVDS: IN+,IN-)	Common Voltage	VCM	$\frac{\lvert VID \rvert}{2}$	-	2.4-$\frac{\lvert VID \rvert}{2}$	V	Logic Input Voltage (LVDS: +,IN-)
	Differential Input Voltage	$\lvert VID \rvert$	200	-	600	mV	
	Threshold Voltage (HIGH)	VTH	-	-	100	mV	
	Threshold Voltage (LOW)	VTL	-100	-	-	mV	
Logic Input Voltage	VIH	0.7*DVDD	-	DVDD	V		Logic Input Voltage
	VIL	GND	-	0.3*DVDD	V		
Power consumption		P		5	6	W	

【Note】

*1)TYP. specification：Gray-level test Pattern (TYP Freq. @5.0V)

MAX. specification：Black test Pattern (TYP Freq. @5.0V)

Gray-level Pattern

Black Pattern

*2) LVDS Signal Definite：

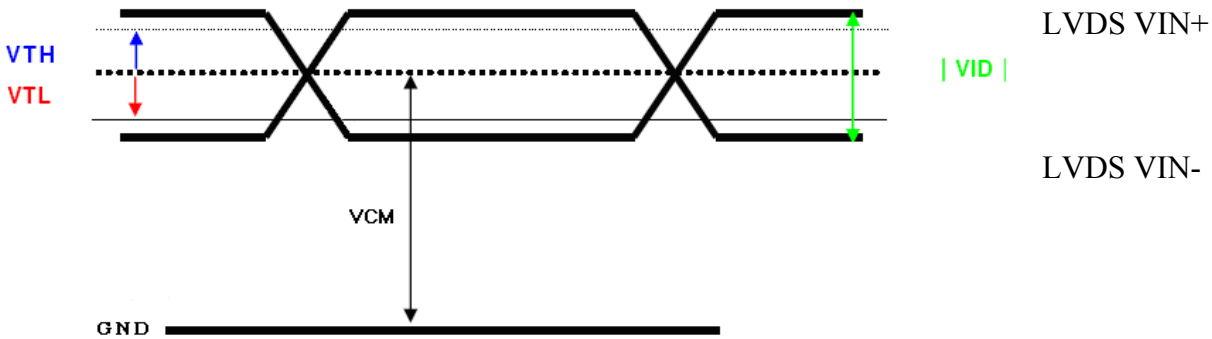

VIN+：Positive differential DATA & CLK Input

VIN-：Negative differential DATA & CLK Input

*3) Irush measure condition

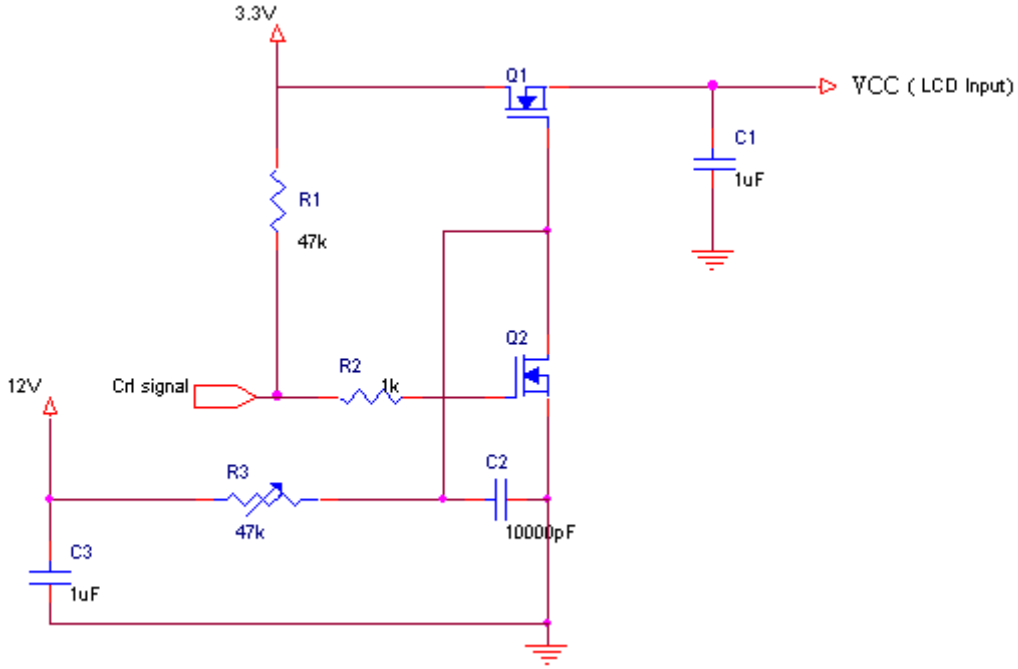

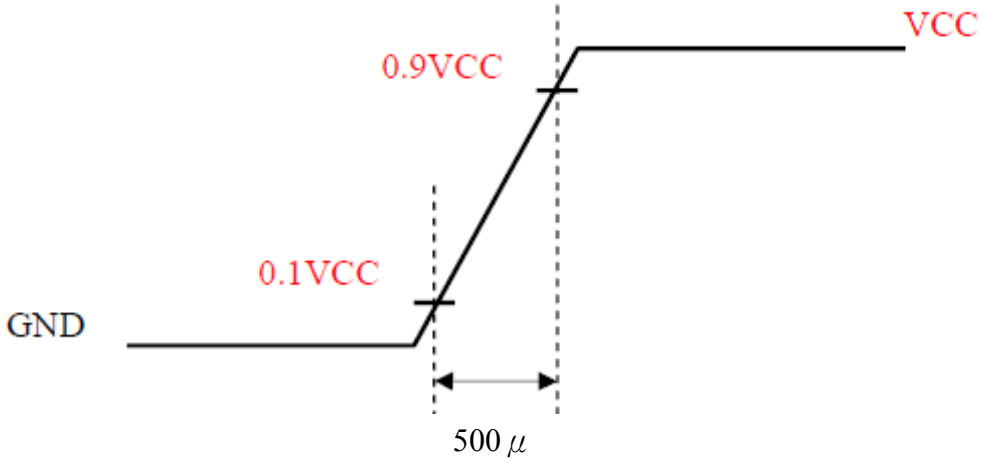

(3).Converter Specification for Backlight Ta=25℃

ITEM		SYMBOL	MIN	TYP	MAX	UNIT	NOTE
LED Driver Input Voltage		VLED	10.8	12.0	13.2	V	
LED Driver Input Current		IVLED	-	1000	1200	mA	*1)
LED Rush Current		VLED_Irush			3	A	*3)
Dimming Control	High	LED_PWM	2.4	--	5.5	V	Dimming Control
	Low		0		0.8		
PWM Frequency			100	200	1K	Hz	*2)
Duty Ratio			5	-	100	%	
ON/OFF Control	High	LED_EN	2.4		5.5	V	ON/OFF Control
	Low		0		0.8		
Power Consumption (Backlight)		BLW	--	12.0	14.4	W	
LED Forward voltage (single LED)		VF	2.8	--	3.4		IF=95mA Ta=25℃
LED Forward current (single LED)		IF	--	95	--		Ta=25℃
LIFE TIME (Backlight)			50000	**70000**		hr	*4)

*1) Maximum LED Driver Input Current at 10.8V Input Voltage/PWM Duty 100%.

*2) The ADJ adjust signal level is 0~3.3V，operation frequency:100Hz~1KHz。

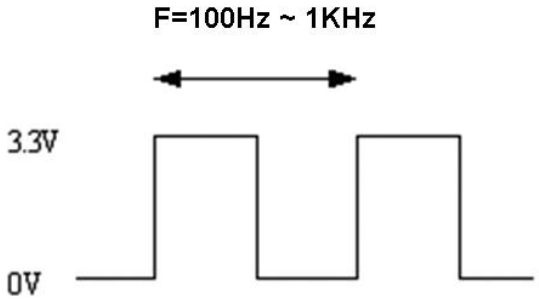

The ADJ can adjust LED BL brightness , where Duty and Luminance are in direct radio.

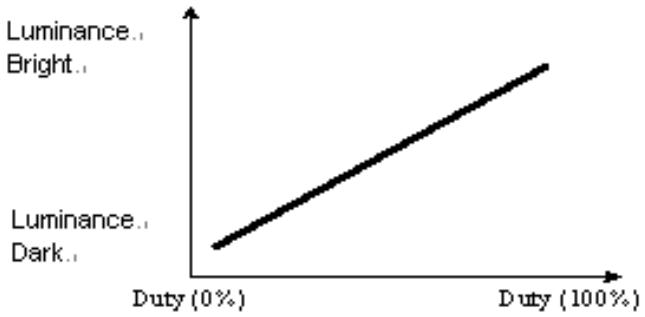

*3) Irush measure condition

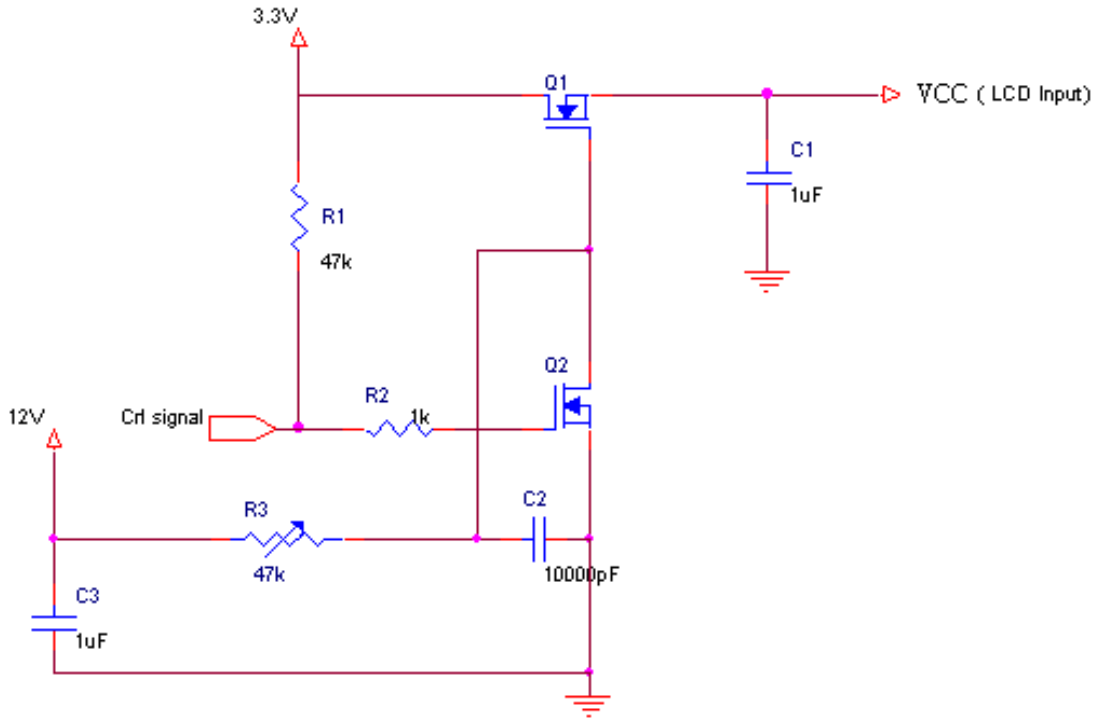

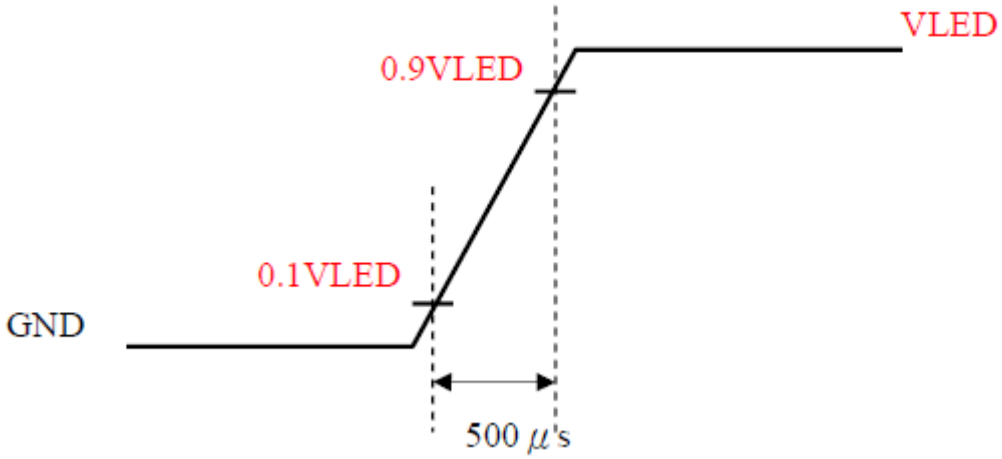

*4). Definition of the LED life time：Luminance (L) under 50% of the initial value.LED life time is restricted under normal ,ambient temperature=25℃ and LED operation forward current=95mA.

(4). Power and Signal sequence

Power Sequence：

0.50 ms≦T1 ≦10 ms	200 ms≦T3	10 ms ≦T8
0.01 ms＜T2 ≦50 ms	10 ms ≦T5	200 ms≦T9
0.50 ms≦T4 ≦10 ms	10 ms ≦T6	500 ms≦T11
0.01 ms＜T10≦50 ms	0 ms ≦T7	

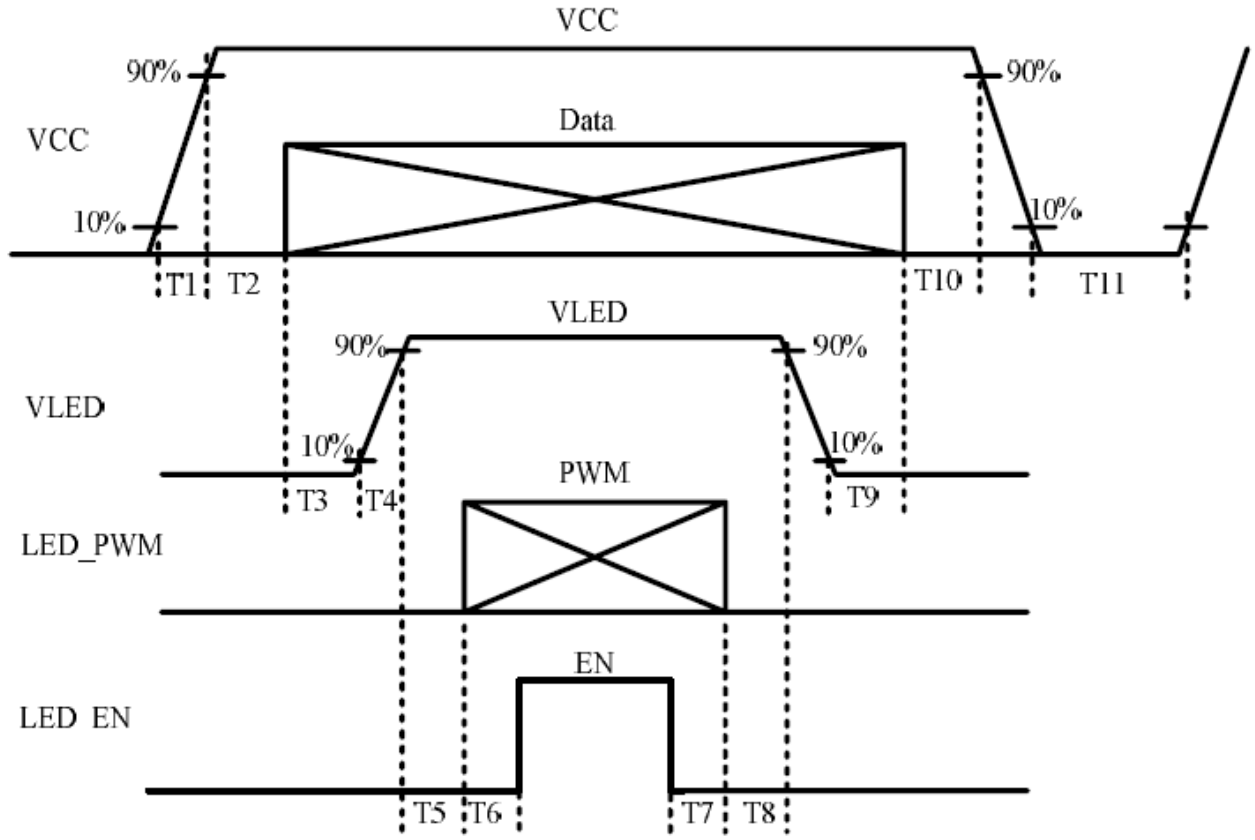

Data: NIND0 ~ NIND3 , PIND0 ~ PIND3 , NINC , PINC , DENA

5. INTERFACE PIN CONNECTION

Used connector: CR17-P30RD-2-E1500 (IS NEW CORPORATION)

or equivalent (**DF14H-30P-1.25H** (HRS))

PIN NO.	SYMOBL	FUNCTION
1	RXO0-	minus signal of odd channel 0(LVDS)
2	RXO0+	plus signal of odd channel 0(LVDS)
3	RXO1-	minus signal of odd channel 1(LVDS)
4	RXO1+	plus signal of odd channel 1(LVDS)
5	RXO2-	minus signal of odd channel 2(LVDS)
6	RXO2+	plus signal of odd channel 2(LVDS)
7	GND	ground
8	RXOC-	minus signal of odd clock channel (LVDS)
9	RXOC+	plus signal of odd clock channel (LVDS)
10	RXO3-	minus signal of odd channel 3(LVDS)
11	RXO3+	plus signal of odd channel 3(LVDS)
12	RXE0-	minus signal of even channel 0(LVDS)
13	RXE0+	plus signal of even channel 0(LVDS)
14	GND	ground
15	RXE1-	minus signal of even channel 1(LVDS)
16	RXE1+	plus signal of even channel 1(LVDS)
17	GND	ground
18	RXE2-	minus signal of even channel 2(LVDS)
19	RXE2+	plus signal of even channel 2(LVDS)
20	RXEC-	minus signal of even clock channel (LVDS)
21	RXEC+	plus signal of even clock channel (LVDS)
22	RXE3-	minus signal of even channel 3(LVDS)
23	RXE3+	plus signal of even channel 3(LVDS)
24	GND	ground
25	GND	ground
26	GND	ground
27	GND	ground
28	VCC	Power supply input voltage(5.0 V)
29	VCC	Power supply input voltage(5.0 V)
30	VCC	Power supply input voltage(5.0 V)

1) Please keep the NC Pin and don't connect it to GND or other signals.

2) GND Pin must connect to the ground, don't let it be a vacant pin.

(2) CN2 (Backlight)

Used connector: 7905Z08-000000-T1-R (STARCONN)

or equivalent (**SM08B-GHH-TB** (JST))

PIN #	SYMBOL	FUNCTION
1	VLED	+12V Power Supply
2	VLED	+12V Power Supply
3	VLED	+12V Power Supply
4	GND	GND
5	GND	GND
6	GND	GND
7	LED_EN	ON : 5V / OFF: 0V (*1)
8	LED_PWM	Light Dimming Control：PWM Input for Dimming: L : 0V / H : 5V Freq : 100-1000Hz Duty : 5%-100%

*1) Enable High=5.5 to 2.4, Low=0 to 0.8V

6. INTERFACE TIMING

(1) Timing Specifications

ITEM			SYMBOL	MIN	TYP	MAX	UNIT
LCD Timing	DCLK	Frequency	f_{CLK}	44	54	67.5	MHz
		Period	t_{CLK}	14.81	18.52	22.2	ns
	DATA Enable DENA	Horizontal Active	tHA		640		tCLK
		Horizontal Blank	tHB	140	204	-	tCLK
		Horizontal Total Time	tH	780	844	2047	tCLK
		Vertical Active Time	tVA		1024		tH
		Vertical Blank Time	tVB	8	42	126	tH
		Vertical Total Time	tV	1032	1066	1150	tH
		Vertical Frame Rate	Fr	50	60	75	Hz

(2) Timing Chart

a. Horizontal Timing

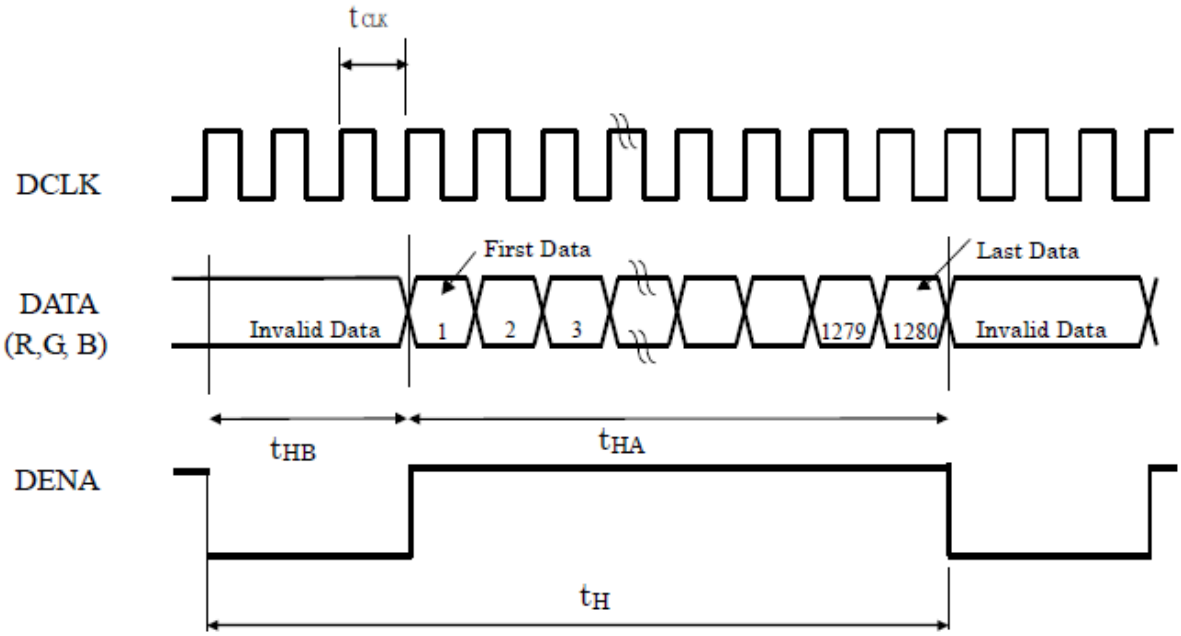

b. Vertical Timing

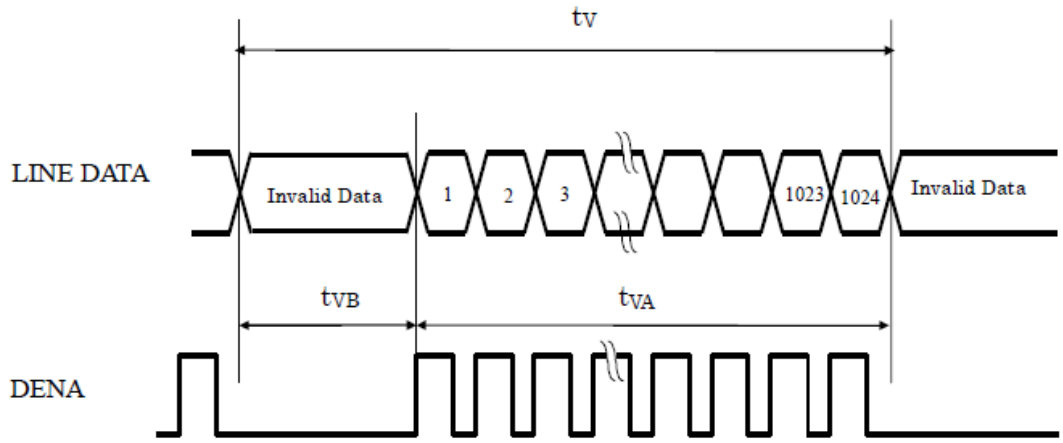

(3) LVDS DATA (VESA)：Timing Chart

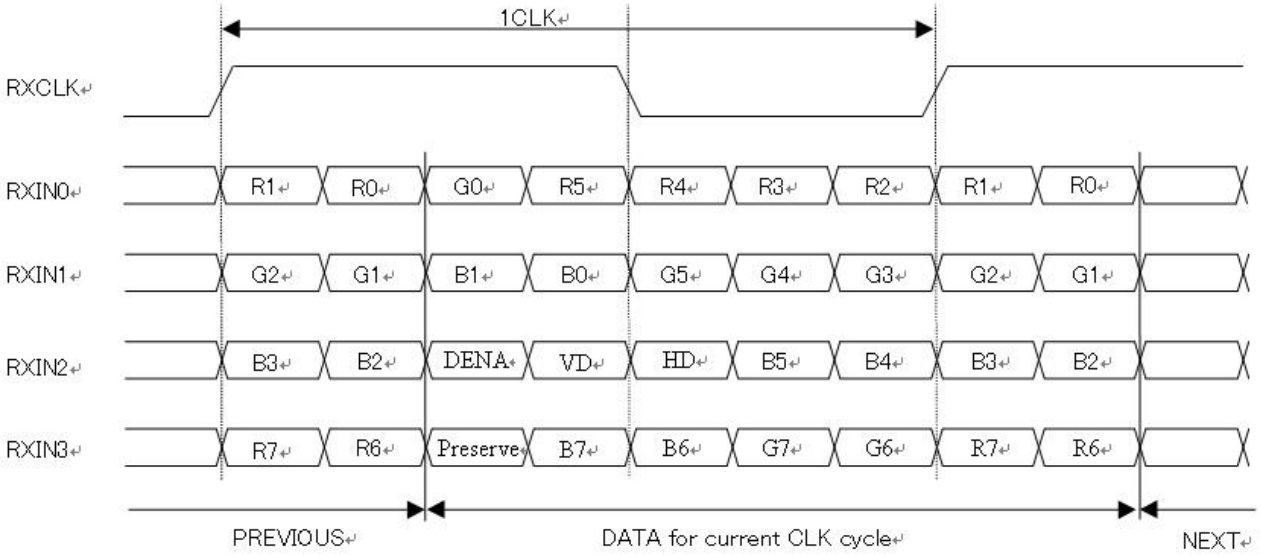

(4) Color Data Assignment

COLOR	INPUT DATA	R DATA								G DATA								B DATA							
		R7	R6	R5	R4	R3	R2	R1	R0	G7	G6	G5	G4	G3	G2	G1	G0	B7	B6	B5	B4	B3	B2	B1	B0
		MSB							LSB	MSB							LSB	MSB							LSB
BASIC COLOR	BLACK	0	0	0	0	0	0	0	0	0	0	0	0	0	0	0	0	0	0	0	0	0	0	0	0
	RED(255)	1	1	1	1	1	1	1	1	0	0	0	0	0	0	0	0	0	0	0	0	0	0	0	0
	GREEN(255)	0	0	0	0	0	0	0	0	1	1	1	1	1	1	1	1	0	0	0	0	0	0	0	0
	BLUE(255)	0	0	0	0	0	0	0	0	0	0	0	0	0	0	0	0	1	1	1	1	1	1	1	1
	CYAN	0	0	0	0	0	0	0	0	1	1	1	1	1	1	1	1	1	1	1	1	1	1	1	1
	MAGENTA	1	1	1	1	1	1	1	1	0	0	0	0	0	0	0	0	1	1	1	1	1	1	1	1
	YELLOW	1	1	1	1	1	1	1	1	1	1	1	1	1	1	1	1	0	0	0	0	0	0	0	0
	WHITE	1	1	1	1	1	1	1	1	1	1	1	1	1	1	1	1	1	1	1	1	1	1	1	1
RED	RED(0)	0	0	0	0	0	0	0	0	0	0	0	0	0	0	0	0	0	0	0	0	0	0	0	0
	RED(1)	0	0	0	0	0	0	0	1	0	0	0	0	0	0	0	0	0	0	0	0	0	0	0	0
	RED(2)	0	0	0	0	0	0	1	0	0	0	0	0	0	0	0	0	0	0	0	0	0	0	0	0
	RED(254)	1	1	1	1	1	1	1	0	0	0	0	0	0	0	0	0	0	0	0	0	0	0	0	0
	RED(255)	1	1	1	1	1	1	1	1	0	0	0	0	0	0	0	0	0	0	0	0	0	0	0	0
GREEN	GREEN(0)	0	0	0	0	0	0	0	0	0	0	0	0	0	0	0	0	0	0	0	0	0	0	0	0
	GREEN(1)	0	0	0	0	0	0	0	0	0	0	0	0	0	0	0	1	0	0	0	0	0	0	0	0
	GREEN(2)	0	0	0	0	0	0	0	0	0	0	0	0	0	0	1	0	0	0	0	0	0	0	0	0
	GREEN(254)	0	0	0	0	0	0	0	0	1	1	1	1	1	1	1	0	0	0	0	0	0	0	0	0
	GREEN(255)	0	0	0	0	0	0	0	0	1	1	1	1	1	1	1	1	0	0	0	0	0	0	0	0
BLUE	BLUE(0)	0	0	0	0	0	0	0	0	0	0	0	0	0	0	0	0	0	0	0	0	0	0	0	0
	BLUE(1)	0	0	0	0	0	0	0	0	0	0	0	0	0	0	0	0	0	0	0	0	0	0	0	1
	BLUE(2)	0	0	0	0	0	0	0	0	0	0	0	0	0	0	0	0	0	0	0	0	0	0	1	0
	BLUE(254)	0	0	0	0	0	0	0	0	0	0	0	0	0	0	0	0	1	1	1	1	1	1	1	0
	BLUE(255)	0	0	0	0	0	0	0	0	0	0	0	0	0	0	0	0	1	1	1	1	1	1	1	1

[Note]

1) Definition of gray scale:

Color (n): n indicates gray scale level; higher n means brighter level.

2) Data: 1-High, 0-Low.

3) This assignment is applied to both odd and even data.

7. BLOCK DIAGRAM

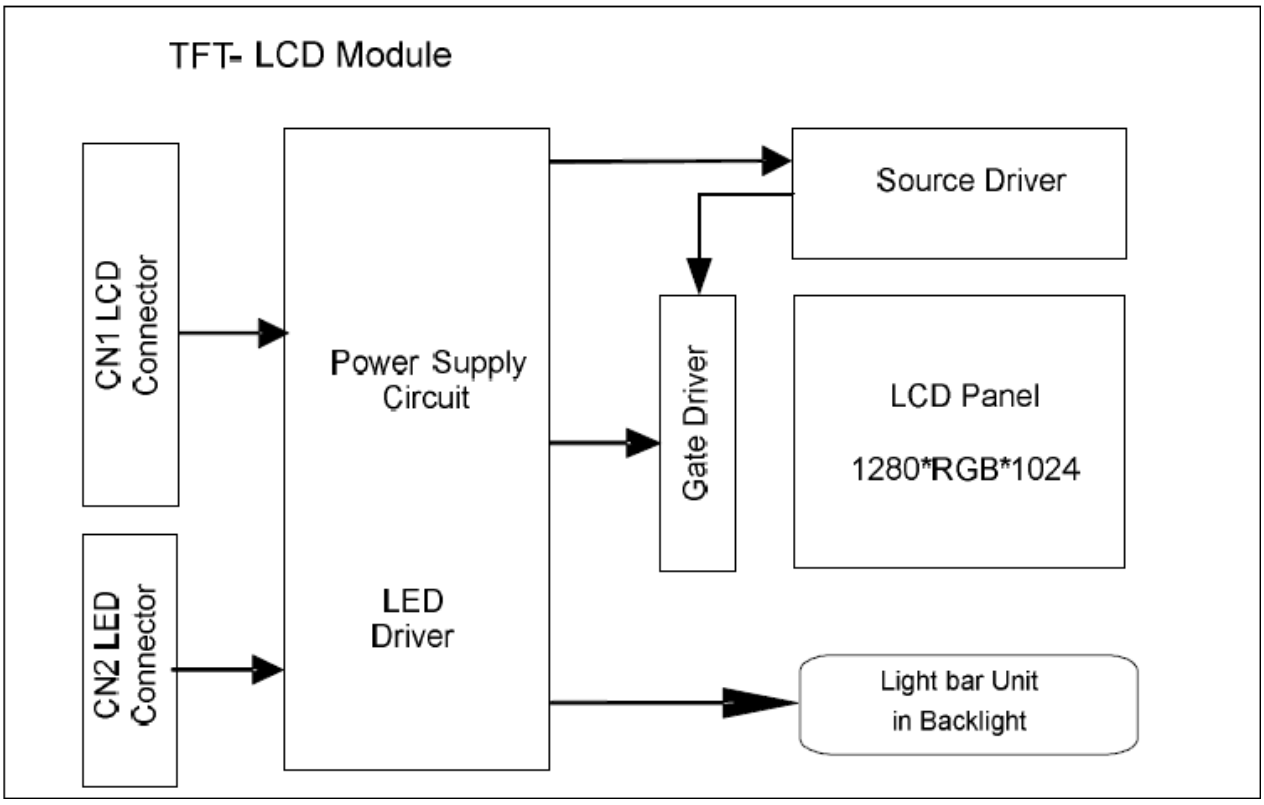

8. OPTICAL CHARACTERISTICS

Ta=25℃，VCC=3.3

ITEM			SYMBOL	CONDITION	min	typ	max	UNIT	REMARK
Contrast Ratio			CR	θ = ϕ = 0°	600	1000	--	--	*1) 2)
Luminance(CEN)			L	θ = ϕ = 0°	360	450	--	cd/m^2	*1) 3)
9P Uniformity			ΔL	θ = ϕ = 0°	75	80	--	%	*1) 3)
Response Time			Tr+ Tf	θ = ϕ = 0°	--	16	--	ms	*5)
Crosstalk			CT	θ = ϕ = 0°	--	--	--	%	*6)
Viewing Angle	Horizontal		ϕ	CR≧10	-70~70	-80~80	--	Deg.	*4)
	Vertical		θ		-60~60	-70~70	--		
Color Coordinates		White	X Y	θ = ϕ = 0°	(0.263) (0.279)	(0.313) (0.329)	(0.363) (0.379)		*3)
		Red	X Y		TBD	TBD	TBD		
		Green	X Y		TBD	TBD	TBD		
		Blue	X Y		TBD	TBD	TBD		
Gamut			CG	θ = ϕ = 0°	--	72	--	--	--
Gamma			γ	VESA	2	2.2	2.4	--	*7)
Image Sticking			Tis	4hr			5	min	*8)

[Note]

Definition of these measurement items is as follows:

1) Setup of Measurement Equipment

The LCD module should be turn-on to a stable luminance level to be reached. The measurement should be executed after lighting Backlight for 20 minutes and in a dark room.

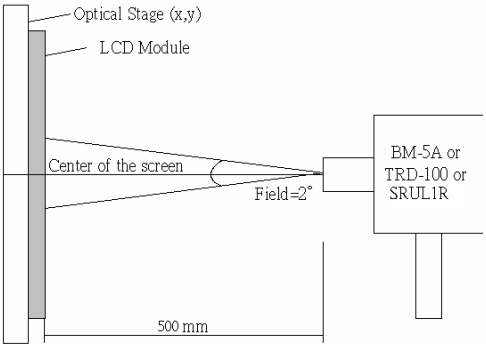

2).Definition of Contrast Ratio:
CR=ON (White) Luminance/OFF (Black) Luminance.

3).Definition of Luminance and Luminance uniformity:
Center Luminance, &Color coordinate: measuring the luminance of the point no. 5
Average Luminance: measuring average luminance of points no.1-no.9
Uniformity: △L= [L (Min)/L (Max)] ×100 %

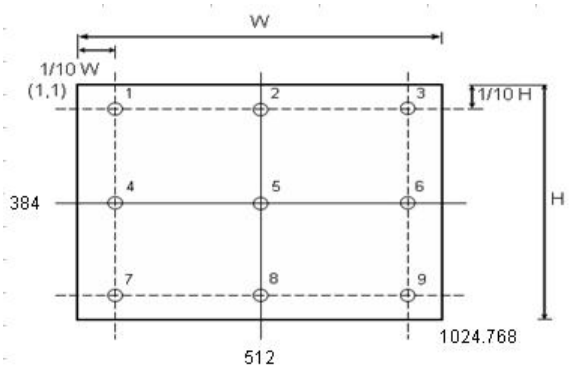

4).Definition of Viewing Angle (θ , ϕ):

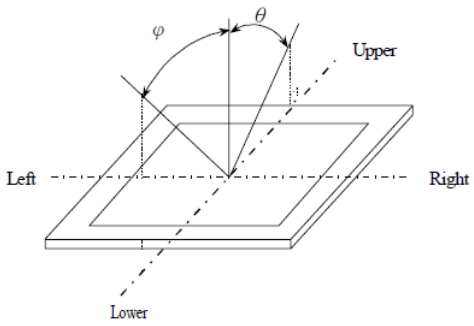

5) Definition of Response Time:

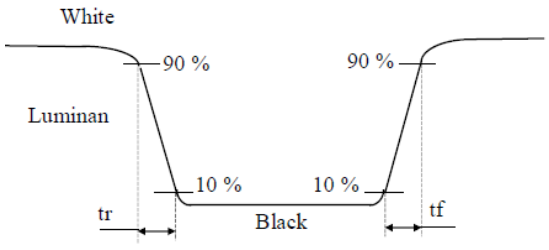

6) Definition of crosstalk:

CT= | Y_B-Y_A | /Y_A X 100 (%)

Y_A : The luminance of measured position at pattern A

Y_B : The luminance of measured position at pattern B with Gray level 0

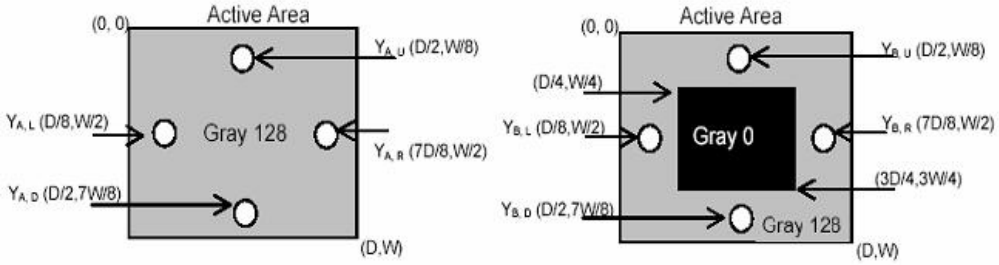

Pattern A Pattern B

7) Definition of Gamma (γ), follow VESA standard sampling every 16 gray level (0,16,32,…..224,240,255)

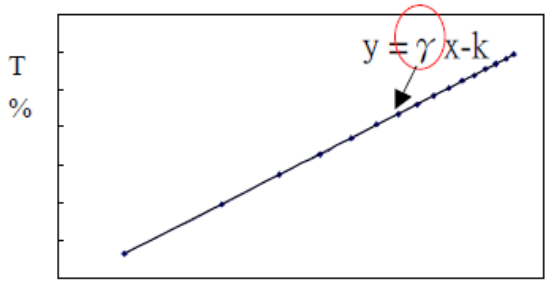

Gray level (LOG)

8) Image Sticking :

Condition of image sticking test: 25℃

Operation with test pattern sustained for 4hrs, then change to gray pattern immediately. After 5 min, the Mura must be disappeared completely.

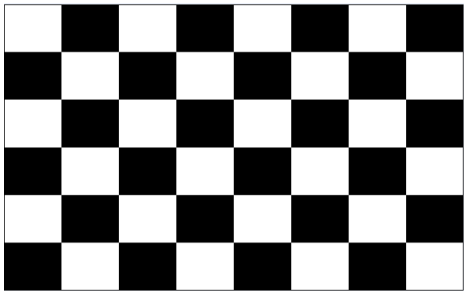

(a) Test Pattern(Chess Board Pattern)

(b) judgment Pattern(128 Gray Pattern)

9. RELIABILITY TEST CONDITIONS

(1) Temperature and Humidity

TEST ITEMS	CONDITIONS	REMARK
High Temperature High Humidity Operation	50℃; 80%RH; 240hrs (No condensation)	
High Temperature Operation	80℃; 240hrs	
High Temperature Storage	80℃; 240hrs	
Low Temperature Operation	-30℃; 240hrs	
Low Temperature Storage	-30℃; 240hrs	
Thermal Shock	Between -20℃(0.5hr) ~ 60℃ (0.5hr); 50 Cycles	

(2) Shock & Vibration

ITEMS	CONDITIONS
SHOCK (NON-OPERATION)	Shock level: (50 G) Waveform: half sinusoidal wave, 20ms Number of shocks: one shock input in each direction of three mutually perpendicular axes for a total of six shock inputs
VIBRATION (NON-OPERATION)	Acceleration:1.5G Waveform: Random Frequency :10~200~10Hz Sweep:30Minute each Axis(X,Y,Z)

(3) ESD

POSITION	CONDITION(MDL turn off)
Connector	1. 200 pF，0 Ω，±200 V 2. contact mode for each pin
Module	1. 150 pF，330 Ω，±15K V (Air mode)，±8K V (Contact mode) 2. Air mode, test 25 times for each test point 3. Contact mode, 25 times for each test point

(4) Judgment standard

The judgment of the above test should be made as follow: Pass: Normal display image with no line defect.

Fail: No display image or line defects

10. OUTLINE DIMENSION

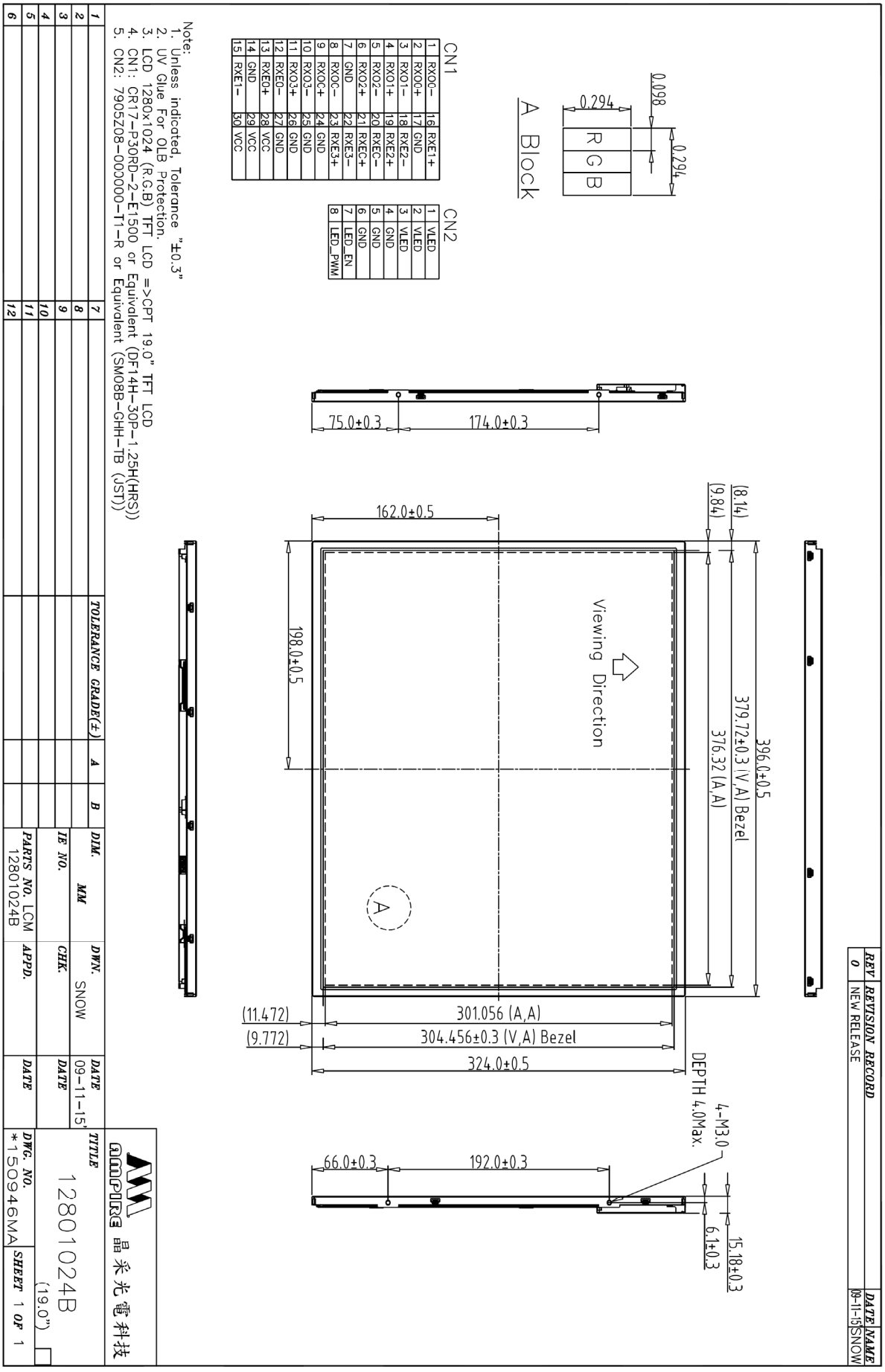

REV	REVISION RECORD	DATE	NAME
0	NEW RELEASE	09-11-15	SNOW

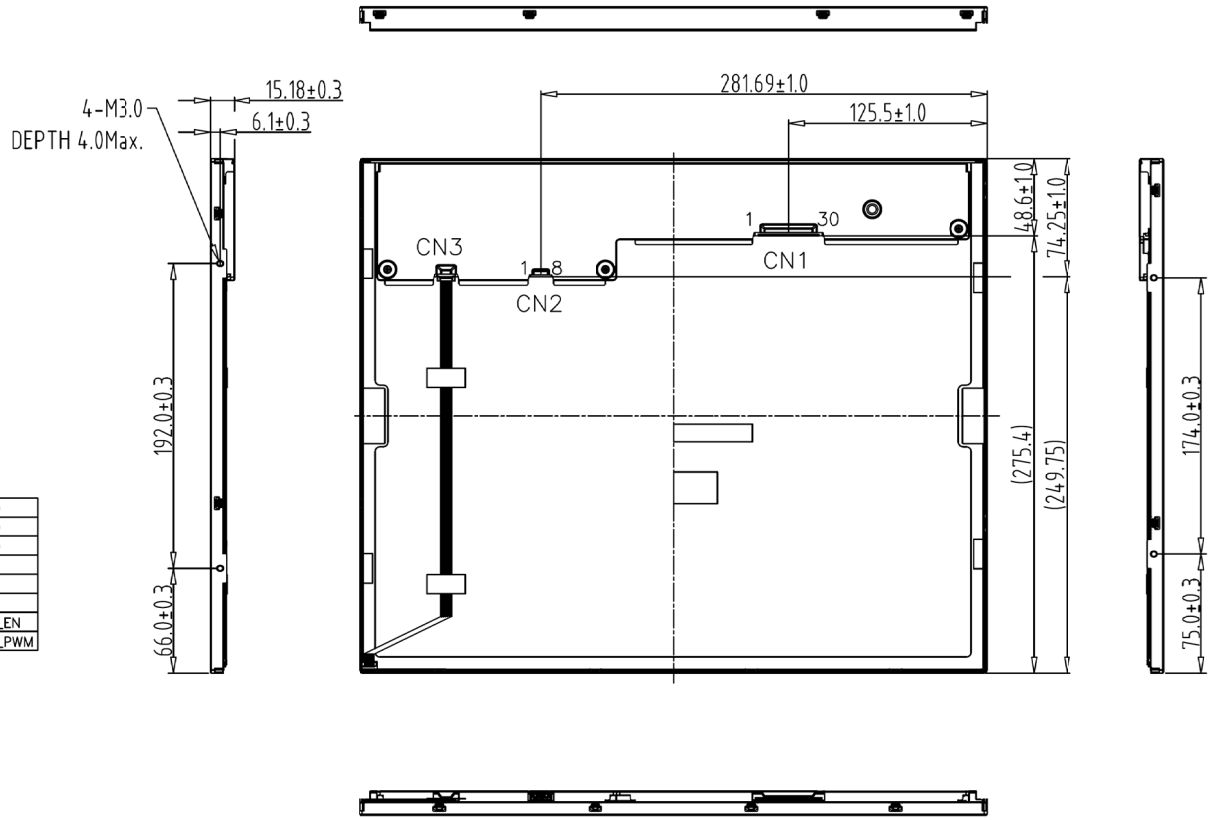

CN1

1	RXO0−	16	RXE1+
2	RXO0+	17	GND
3	RXO1−	18	RXE2−
4	RXO1+	19	RXE2+
5	RXO2−	20	RXEC−
6	RXO2+	21	RXEC+
7	GND	22	RXE3−
8	RXOC−	23	RXE3+
9	RXOC+	24	GND
10	RXO3−	25	GND
11	RXO3+	26	GND
12	RXEC−	27	GND
13	RXEC+	28	VCC
14	GND	29	VCC
15	RXE1−	30	VCC

CN2

1	VLED
2	VLED
3	VLED
4	GND
5	GND
6	GND
7	LED_EN
8	LED_PWM

Note:
1. Unless indicated, Tolerance "±0.3"
2. UV Glue For OLB Protection.
3. LCD 1280x1024 (R.G.B) TFT LCD =>CPT 19.0" TFT LCD
4. CN1: CR17−P30RD−2−E1500 or Equivalent (DF14H−30P−1.25H(HRS))
5. CN2: 7905Z08−000000−T1−R or Equivalent (SM08B−GHH−TB (JST))

Back view

				TOLERANCE GRADE(±)	A	B	DIM.	DWN.	DATE	TITLE
1		7					MM	SNOW	09−11−15'	12801024B (19.0")
2		8					IE NO.	CHK.	DATE	
3		9								
4		10								
5		11					PARTS NO. LCM−1 12801024B	APPD.	DATE	DWG. NO. *150947MA
6		12								SHEET 1 OF 1

AMPIRE 晶采光電科技

Date : 2015/09/15 AMPIRE CO., LTD. 21