() Preliminary Specifications
(V) Final Specifications

Module	13.3 Inch Color TFT-LCD
Model Name	G133XTN01.2

Customer	**Date**	**Approved by**	**Date**
		Sean Lin	2017/8/23
Checked & Approved by		**Prepared by**	
		CH Tsai	2017/8/23
Note: This Specification is subject to change without notice.		General Display Business Division / AU Optronics corporation	

AUO confidential

Contents

1. Operating Precautions 4
2. General Description 5
2.1 Display Characteristics 5
2.2 Optical Characteristics 6
3. Functional Block Diagram 10
4. Absolute Maximum Ratings 11
4.1 Absolute Ratings of TFT LCD Module 11
4.2 Absolute Ratings of Environment 11
5.1 TFT LCD Module 12
5.2 Backlight Unit 14
6. Signal Characteristic 15
6.1 Pixel Format Image 15
6.2 Scanning Direction 15
6.3 Signal Description 16
6.4 Power ON/OFF Sequence 17
7. Integration Interface Requirement 18
7.1 Connector Description 18
8. Reliability Test Criteria 21
9. Mechanical Characteristics 22
9.1 LCM Outline Dimension (Front View) 22
9.2 LCM Outline Dimension (Rear View) 23
10. Label and Packaging 24
10.1 Shipping Label (on the rear side of TFT-LCD display) 24
10.2 Carton Package 24
10.3 Palletizing 25

AUO confidential

Record of Revision

Version and Date	Page	Old description	New Description
0.0 2017/3/1	All	First Edition	
0.1 2017/6/28	14	Fpwm=1~100%	Fpwm=5~100%
1.0 2017/8/23			Final spec

AUO confidential

1. Operating Precautions

1) Since front polarizer is easily damaged, please be cautious and not to scratch it.
2) Be sure to turn off power supply when inserting or disconnecting from input connector.
3) Wipe off water drop immediately. Long contact with water may cause discoloration or spots.
4) When the panel surface is soiled, wipe it with absorbent cotton or soft cloth.
5) Since the panel is made of glass, it may be broken or cracked if dropped or bumped on hard surface.
6) Since CMOS LSI is used in this module, take care of static electricity and insure human earth when handling.
7) Do not open nor modify the module assembly.
8) Do not press the reflector sheet at the back of the module to any direction.
9) In case if a module has to be put back into the packing container slot after it was taken out from the container, do not press the center of the LED Reflector edge. Instead, press at the far ends of the LED Reflector edge softly. Otherwise the TFT Module may be damaged.
10) At the insertion or removal of the Signal Interface Connector, be sure not to rotate nor tilt the Interface Connector of the TFT Module.
11) TFT-LCD Module is not allowed to be twisted & bent even force is added on module in a very short time. Please design your display product well to avoid external force applying to module by end-user directly.
12) Small amount of materials without flammability grade are used in the TFT-LCD module. The TFT-LCD module should be supplied by power complied with requirements of Limited Power Source (IEC60950-1 or UL60950-1), or be applied exemption.
13) Severe temperature condition may result in different luminance, response time.
14) Continuous operating TFT-LCD Module under high temperature environment may accelerate LED light bar exhaustion and reduce luminance dramatically.
15) The data on this specification sheet is applicable when TFT-LCD module is placed in landscape position.
16) Continuous displaying fixed pattern may induce image sticking. It's recommended to use screen saver or moving content periodically if fixed pattern is displayed on the screen.

AUO confidential

2. General Description

G133XTN01.0 is a Color Active Matrix Liquid Crystal Display composed of a TFT-LCD display, a driver circuit, and LED backlight system. The screen format is intended to support 16:9 , 1366(H) x768(V) screen and 262k/16.7M colors (RGB 6-bits + Hi-FRC data driver) with LED backlight driving circuit. All input signals are LVDS interface compatible. All design rules of this module can correspond to PSWG standard.

G133XTN01.0 is designed for industrial display applications.

2.1 Display Characteristics

The following items are characteristics summary on the table under 25 ℃ condition:

Items	Unit	Specifications
Screen Diagonal	[inch]	13.3
Active Area	[mm]	293.42(H) x 164.97(V)
Pixels H x V		1366x3(RGB) x 768
Pixel Pitch	[mm]	(0.0716x3) x0.2148
Pixel Arrangement		R.G.B. Vertical Stripe
Display Mode		TN, Normally White
Nominal Input Voltage VDD	[Volt]	3.3 typ.
Typical Power Consumption	[Watt]	Max 3W @ White pattern
Weight	[Grams]	255g Max.
Physical Size	[mm]	306.3(H) x 197.2(V) x 3.0 (D) typ
Electrical Interface		LVDS
Surface Treatment		Anti-glare, Hardness 3H
Support Color		16.7M colors (6 bit + Hi FRC)
Temperature Range Operating Storage (Non-Operating)	 [^{o}C] [^{o}C]	 -20 to +60 -30 to +70
RoHS Compliance		RoHS Compliance
Light Bar Unit		LED

AUO confidential

2.2 Optical Characteristics

The optical characteristics are measured under stable conditions at 25℃ (Room Temperature):

Item	Unit	Conditions	Min.	Typ.	Max.	Note
White Luminance	[cd/m2]		255	300	-	1
Uniformity	%	9 Points			1.25-	1, 2, 3
Contrast Ratio				400	-	4
Cross talk	%		-	--	1.5	5
Response Time	[msec]	Rising	-	5.7		6
	[msec]	Falling	-	2.3		
	[msec]	Raising + Falling	-	8		
Viewing Angle	[degree] [degree]	Horizontal (Right) CR = 10 (Left)		70 70	- -	7
	[degree] [degree]	Vertical (Upper) CR = 10 (Lower)		50 60	- -	
Color / Chromaticity Coordinates (CIE 1931)		Red x	0.532	0.562	0.592	
		Red y	0.297	0.327	0.357	
		Green x	0.297	0.327	0.357	
		Green y	0.542	0.572	0.602	
		Blue x	0.131	0.161	0.191	
		Blue y	0.095	0.125	0.155	
		White x	0.283	0.313	0.343	
		White y	0.299	0.329	0.359	
Color Gamut	%			45	-	

AUO confidential

Note 1: Measurement method

Equipment Pattern Generator, Power Supply, Digital Voltmeter, Luminance meter (SR_3 or equivalent)

Aperture 1◦ with 50cm viewing distance

Test Point Center

Environment *< 1 lux*

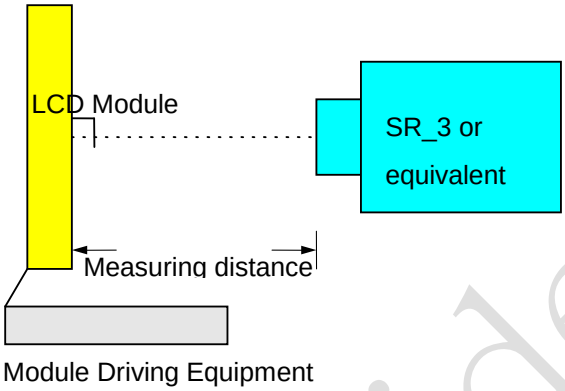

Note 2: Definition of 5points position (Display active area: 293.42(H) x 164.97(V))

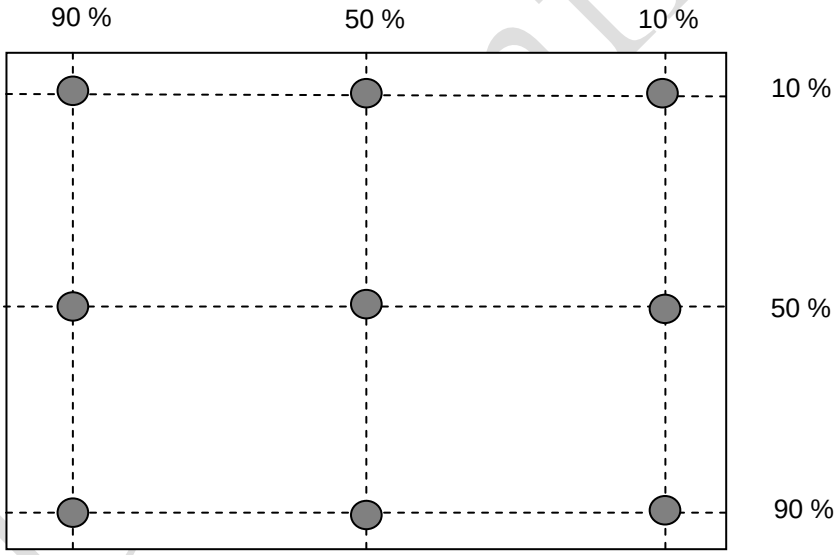

AU Confidential

Note 3: The luminance uniformity of 5 or13 points is defined by dividing the maximum luminance values by the minimum test point luminance

$$\delta_{W9} = \frac{\text{Minimum Brightness of nine points}}{\text{Maximum Brightness of nine points}}$$

Note 4： Definition of contrast ratio (CR):

$$\text{Contrast ratio (CR)} = \frac{\text{Brightness on the “White” state}}{\text{Brightness on the “Black” state}}$$

Note 5： Definition of cross talk (CT)

CT = | YB – YA | / YA × 100 (%)
Where
YA = Luminance of measured location without gray level 0 pattern (cd/m2)
YB = Luminance of measured location with gray level 0 pattern (cd/m2)

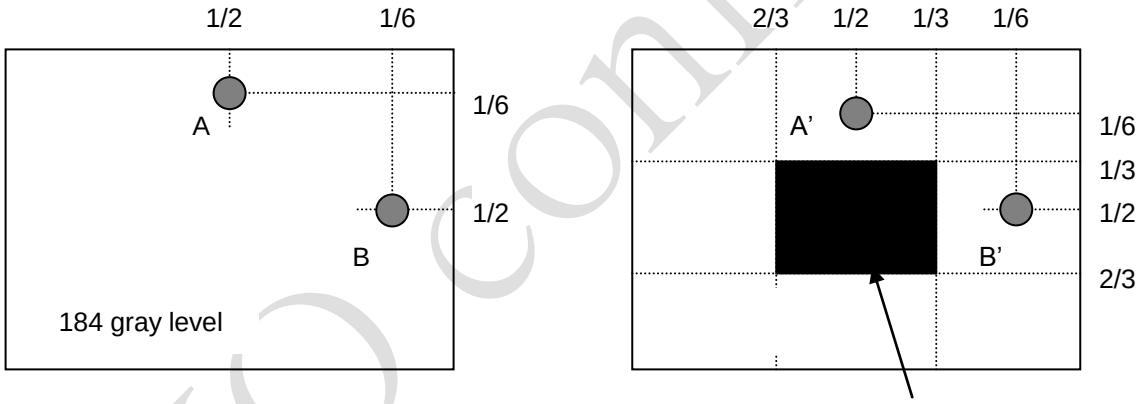

AUO confidential

Note 6: Definition of response time:

The output signals of photo detector are measured when the input signals are changed from “White” to “Black” (falling time) and from “Black” to “White” (rising time), respectively. The response time interval is between 10% and 90% of amplitudes. Please refer to the figure as below.

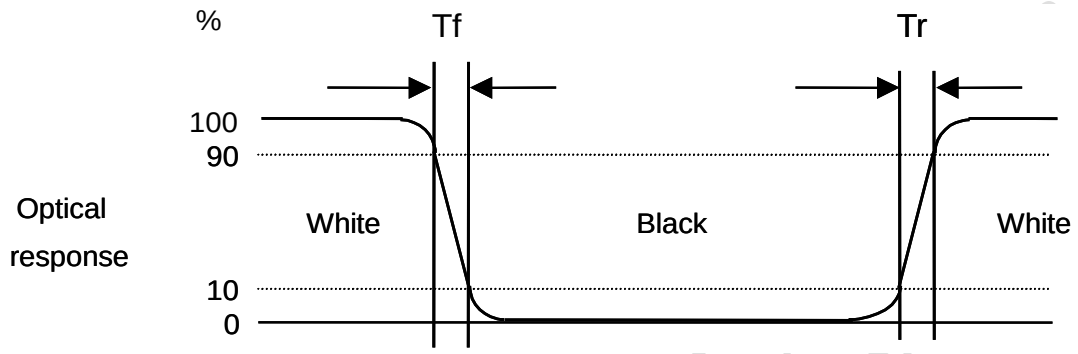

Note 7: Definition of viewing angle

Viewing angle is the measurement of contrast ratio ≧10, at the screen center, over a 180° horizontal and 180° vertical range (off-normal viewing angles). The 180° viewing angle range is broken down as below: 90° (θ) horizontal left and right, and 90° (Φ) vertical high (up) and low (down). The measurement direction is typically perpendicular to the display surface with the screen rotated to its center to develop the desired measurement viewing angle.

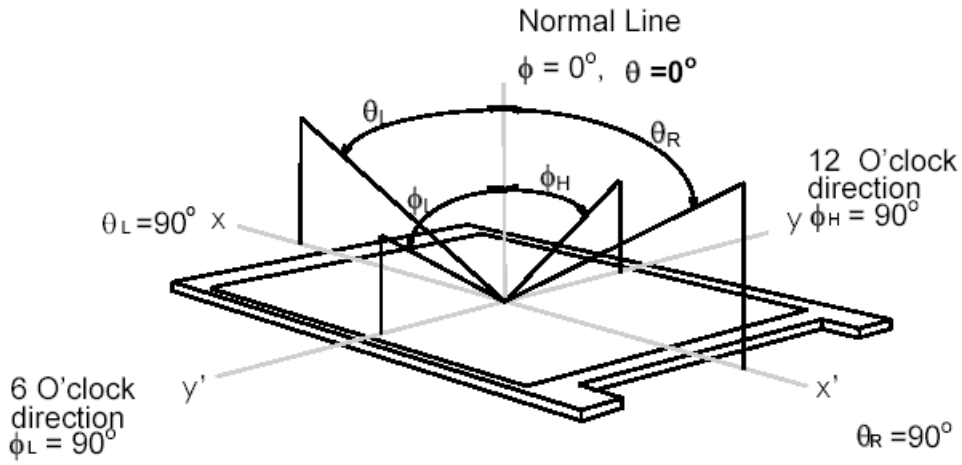

3. Functional Block Diagram

The following diagram shows the functional block of the 15 inch color TFT/LCD module:

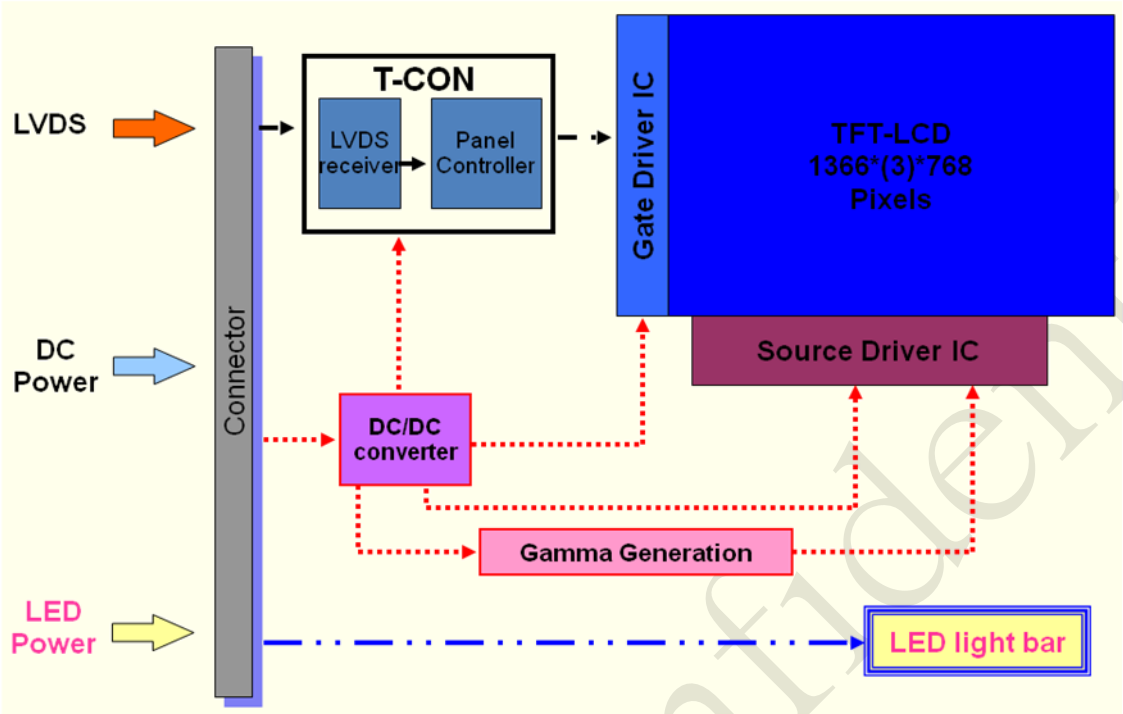

AUO confidential

4. Absolute Maximum Ratings

4.1 Absolute Ratings of TFT LCD Module

Item	Symbol	Min	Max	Unit
Logic/LCD Drive Voltage	Vin	-0.3	+3.6	[Volt]

4.2 Absolute Ratings of Environment

Item	Symbol	Min	Max	Unit
Operating Temperature	TOP	-0	+50	[°C]
Operation Humidity	HOP	8	90	[%RH]
Storage Temperature	TST	-20	+60	[°C]
Storage Humidity	HST	8	90	[%RH]

Note: Maximum Wet-Bulb should be 39℃ and no condensation.

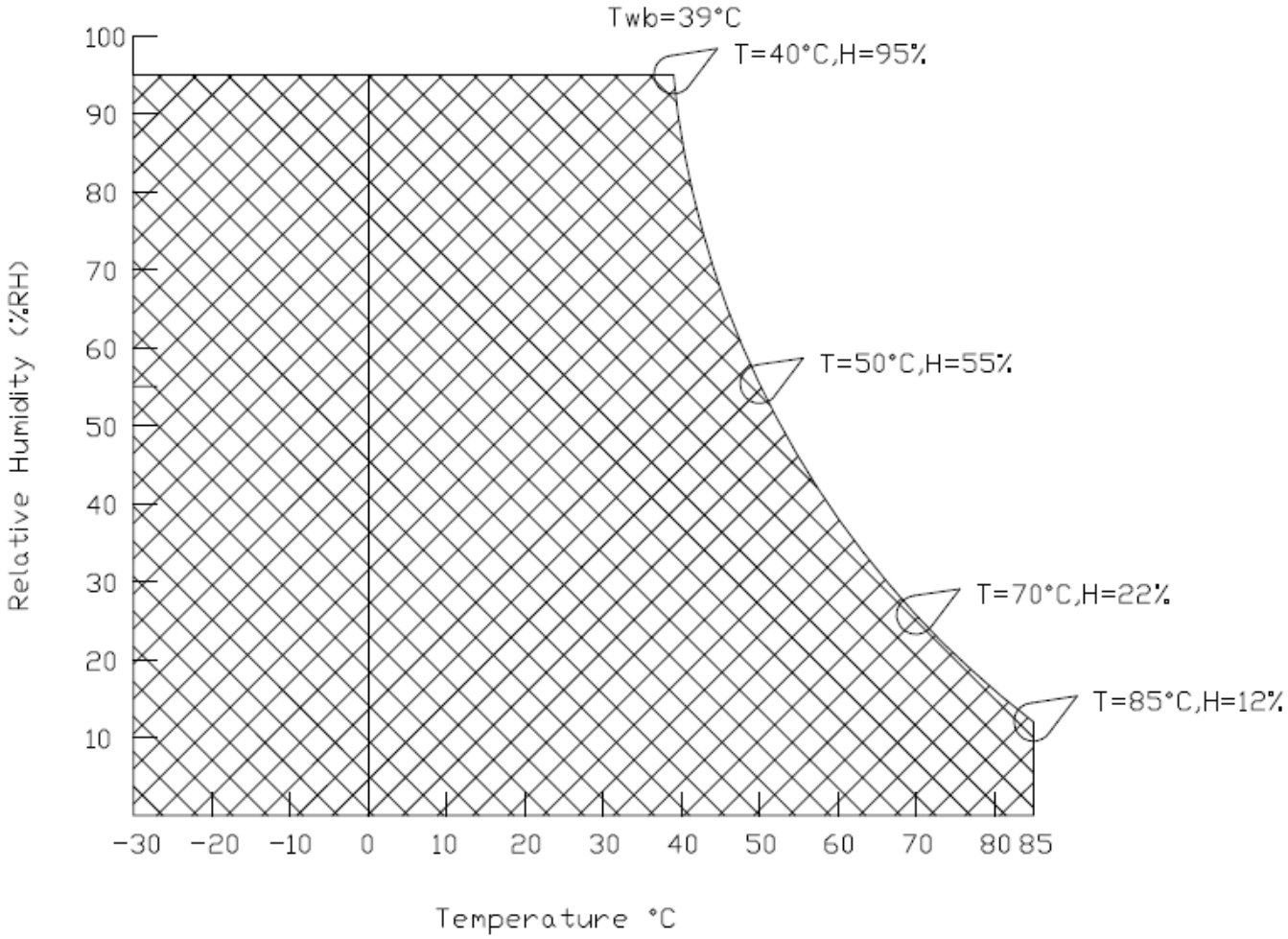

fidential

5. Electrical Characteristics

5.1 TFT LCD Module

5.1.1 Power Specification

Symbol	Parameter	Min	Typ	Max	Units	Remark
VDD	Logic/LCD Drive Voltage	3.0	3.3	3.6	[Volt]	±10%
IDD	VDD Current	-	0.2	0.21	[A]	
Irush	LCD Inrush Current			1.5	[A]	Note 1
PDD	VDD Power	-	0.66	0.76	[Watt]	

Note 1 : Maximum Measurement Condition：White Pattern at 3.3V driving voltage. (Pmax=V3.3 x Iwhite)

Note 2 : Measure Condition

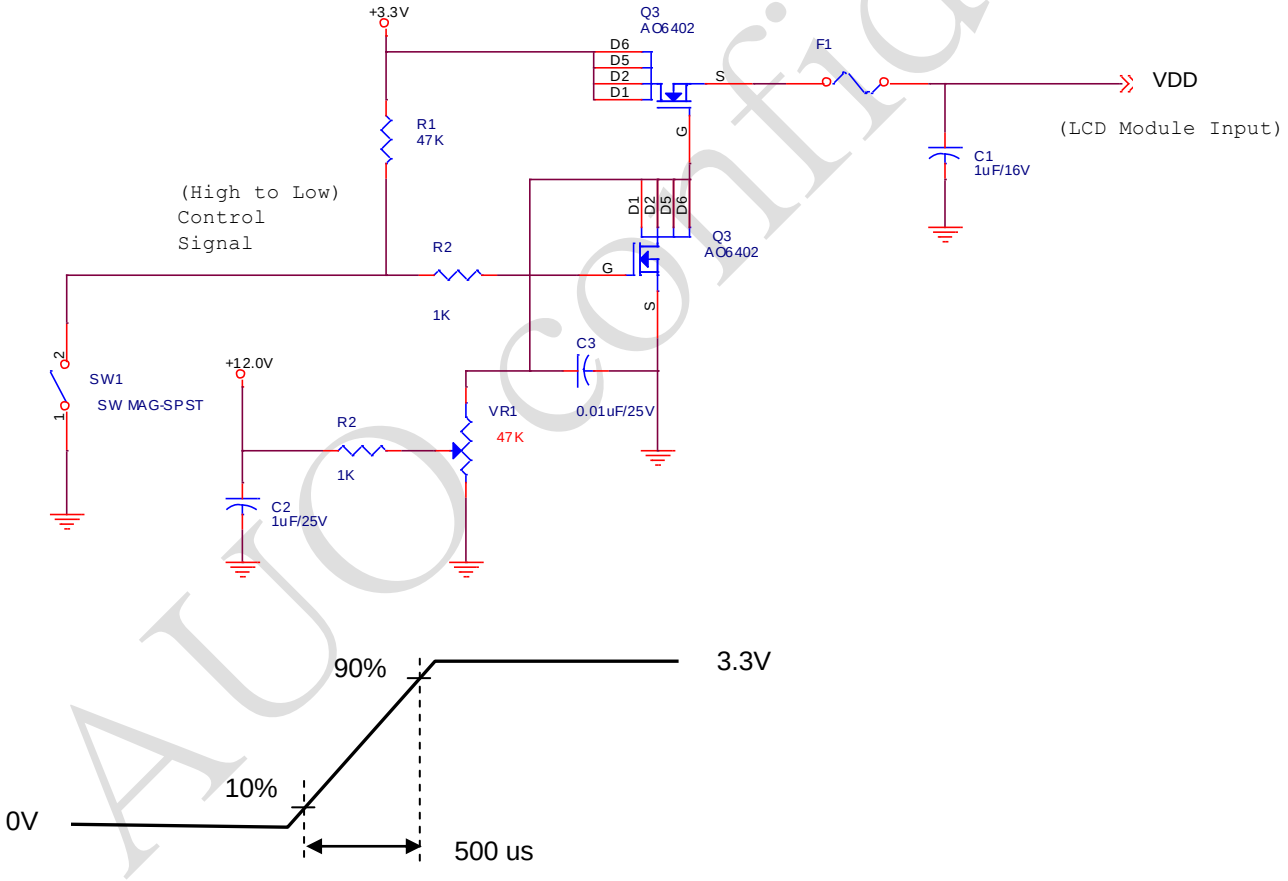

VDD rising time

AUO confidential

5.1.2 Signal Electrical Characteristics

Signal electrical characteristics are as follows:

Symbol	Item	Min.	Typ.	Max.	Unit	Remark
VTH	Differential Input High Threshold	-	-	100	[mV]	VCM=1.2V
VTL	Differential Input Low Threshold	-100	-	-	[mV]	VCM=1.2V
| VID |	Input Differential Voltage	100	400	600	[mV]	
VICM	Differential Input Common Mode Voltage	| VID | /2	1.2	2.4V- | VID | /2	[V]	
$V_{x\Delta Vcom}$	Differential Input Common Mode Voltage Difference	-50	-	50	[mV]	
V_{Xliz}	Differential Input Leakage Current	-10	-	10	uA	

Display Port main link signal:

Input signals shall be low or Hi-Z state when VDD is off.

Note: LVDS Signal Waveform.

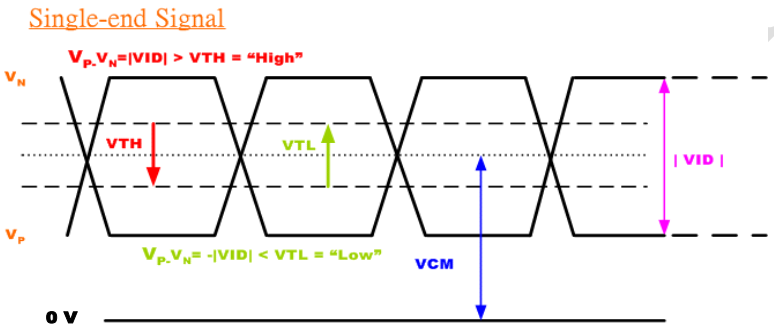

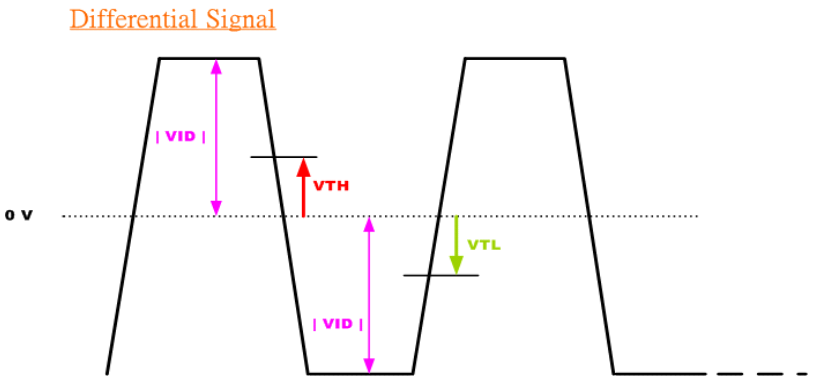

confidential

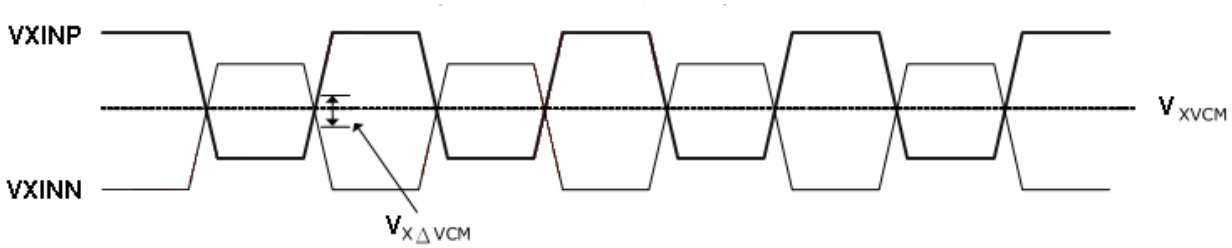

$V_{X\triangle VCM}$: **the voltage difference of the** common mode voltage of the differential input **VXINP** and **VXINN**

5.2 Backlight Unit

5.2.1 Parameter guideline for LED

Following characteristics are measured under stable condition using a LED driving board at 25℃ (Room Temperature).

Symbol	Parameter	Min.	Typ.	Max.	Unit	Remark
Vcc	Input Voltage	5.0	12	21.0	Volt	
Ivcc	Input Current	-	0.175		A	100% Dimming
PLED	Power Consumption	-	2.1	2.3	Watt	100% Dimming
Irush	Inrush Current			1	A	
VLED on/off	On Control Voltage	2.5	3.3	5.5	Volt	
	Off Control Voltage			0.5	Volt	
FPWM	PWM Dimming Frequency	200	1K	10k	Hz	
	High Voltage	2.5	3.3	5.5	Volt	
	Low Voltage			0.5	Volt	
	Dimming Duty Cycle	5	-	100	%	
I_F	LED Forward Current		20		mA	Ta = 25°C
Operating Life		20000			Hrs	Ta = 25°C,IF=20mA

Note 1: Ta means ambient temperature of TFT-LCD module.

Note 2: If the PWM duty ratio(min) is set between 5% to 1%the PWM input frequency should be set below 1KHz .The brightness-duty characteristic might not be able to keep in it's linearity if the dimming control is operated in 1% to 5% range.

Note 3: Definition of life time: LED brightness becomes 50% of its original value. The minimum life time of LED unit is defined at the condition of IR_{LED} = 20 mA and 25±2℃(Room temperature).

Note 4 : 1~5% non-linear & >5% linear.

AUO confidential

6. Signal Characteristic

6.1 Pixel Format Image

Following figure shows the relationship between input signal and LCD pixel format.

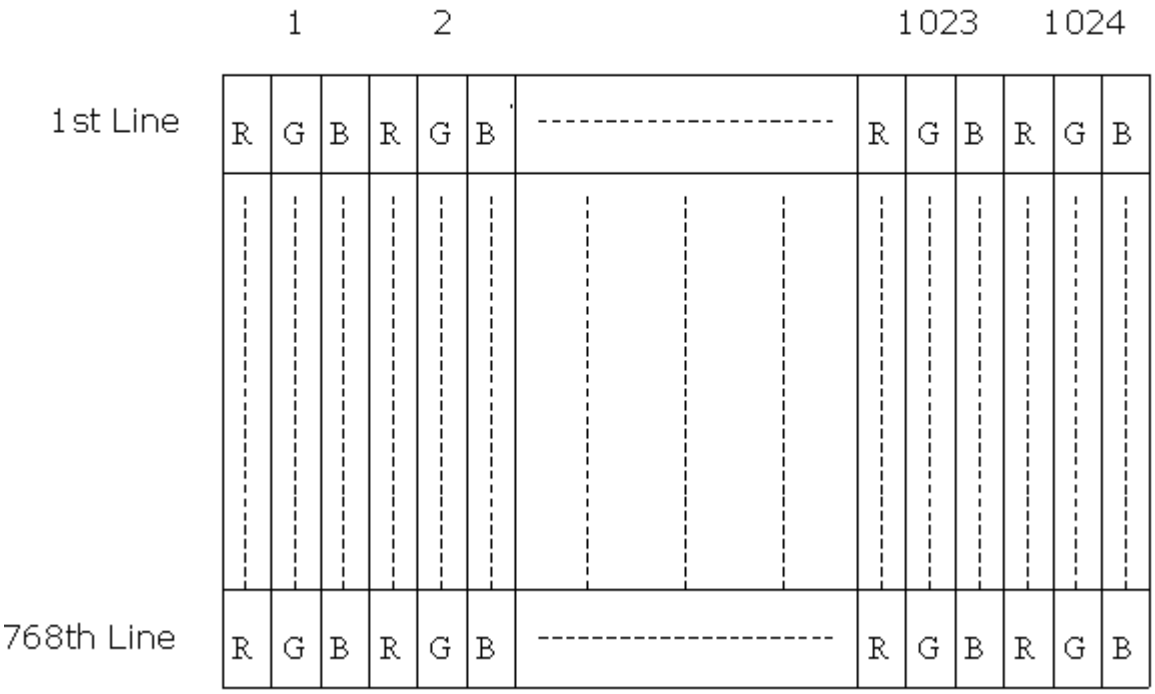

6.2 Scanning Direction

The following figures show the image seen from the front view. The arrow indicates the direction of scan.

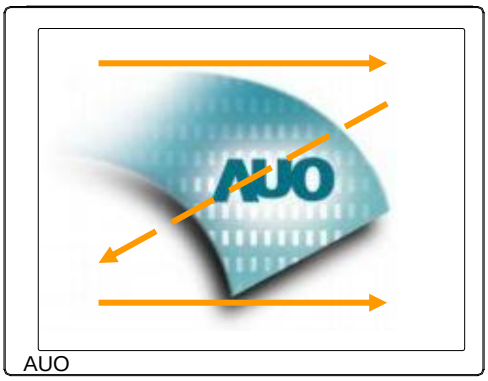

6.3 Signal Description

6.3.1 Timing Characteristics

Basically, interface timings should match the 1366x768 /60Hz manufacturing guide line timing.

Parameter		Symbol	Min.	Typ.	Max.	Unit
Frame Rate		-		60	-	Hz
Clock frequency		$1/T_{Clock}$	74	75	80	MHz
Vertical Section	Period	T_V	800	810	820	T_{Line}
	Active	T_{VD}	-	768	-	
	Blanking	T_{VB}	32	42	52	
Horizontal Section	Period	T_H	1540	1544	1626	T_{Clock}
	Active	T_{HD}	-	1366	-	
	Blanking	T_{HB}	174	178	260	

Note 1 : DE mode only

Note 2 : The maximum clock frequency = $T_V*T_H*60 < 80MHz$

6.4 Power ON/OFF Sequence

VDD power and lamp on/off sequence is as below. Interface signals are also shown in the chart. Signals from any system shall be Hi-Z state or low level when VDD is off.

Display Port panel B/L power sequence timing parameter:

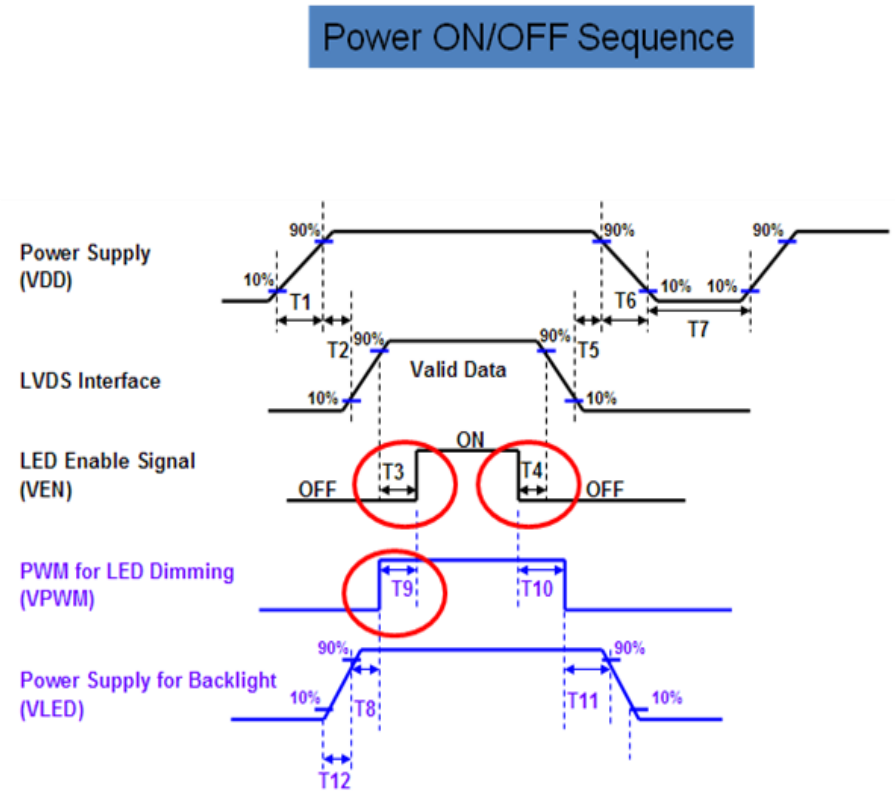

Power Sequence Timing			
Parameter	Value		Units
	Min.	Max.	
T1	0.5	10	
T2	0	50	
T3	200	-	
T4	200	-	
T5	0	50	
T6	0	10	
T7	TBD	-	
T8	10	-	
T9	0	180	
T10	0	180	
T11	10	-	
T12	0.5	10	ms

7. Integration Interface Requirement

Physical interface is described as for the connector on module.

These connectors are capable of accommodating the following signals and will be following components.

7.1 Connector Description

Connector Name / Designation	For Signal Connector
Manufacturer	HRS or compatible
Type / Part Number	FH41-40S0.5SH(0.5) or Compatible

7.2 Pin Assignment

Pin	Signal	Description
1	V_LED	LCD logic and driver power
2	V_LED	LCD logic and driver power
3	V_LED	LCD logic and driver power
4	NC	NO Connect
5	LED_EN	Back light On/Off
6	LED_PWM	System PWM signal Input
7	NC	NO Connect
8	GND	Power Ground
9	GND	Power Ground
10	GND	Power Ground
11	NC	NO Connect
12	NC	NO Connect
13	GND	Power Ground
14	NC	NO Connect
15	NC	NO Connect
16	GND	Power Ground
17	SDA	I2C Data
18	SCL	I2C Clock
19	GND	Power Ground
20	RXIN3P	Positive LVDS differential data input (Odd data)

Pin	Signal	Description
21	RXIN3N	Negative LVDS differential data input (Odd data)
22	GND	Power Ground
23	RXINCLKP	Positive LVDS differential clock input (Even clock)
24	RXINCLKN	Negative LVDS differential clock input (Even clock)
25	GND	Power Ground
26	RXIN2P	Positive LVDS differential data input (Odd data)
27	RXIN2N	Negative LVDS differential data input (Odd data)
28	GND	Power Ground
29	RXIN1P	Positive LVDS differential data input (Odd data)
30	RXIN1N	Negative LVDS differential data input (Odd data)
31	GND	Power Ground
32	RXIN0P	Positive LVDS differential data input (Odd data)
33	RXIN0N	Negative LVDS differential data input (Odd data)
34	NC	NO Connect
35	NC	NO Connect
36	Aging	Aging function
37	NC	NO Connect
38	VDD	Power Supply
39	VDD	Power Supply
40	NC	NO Connect

7.3 Connector Illustration

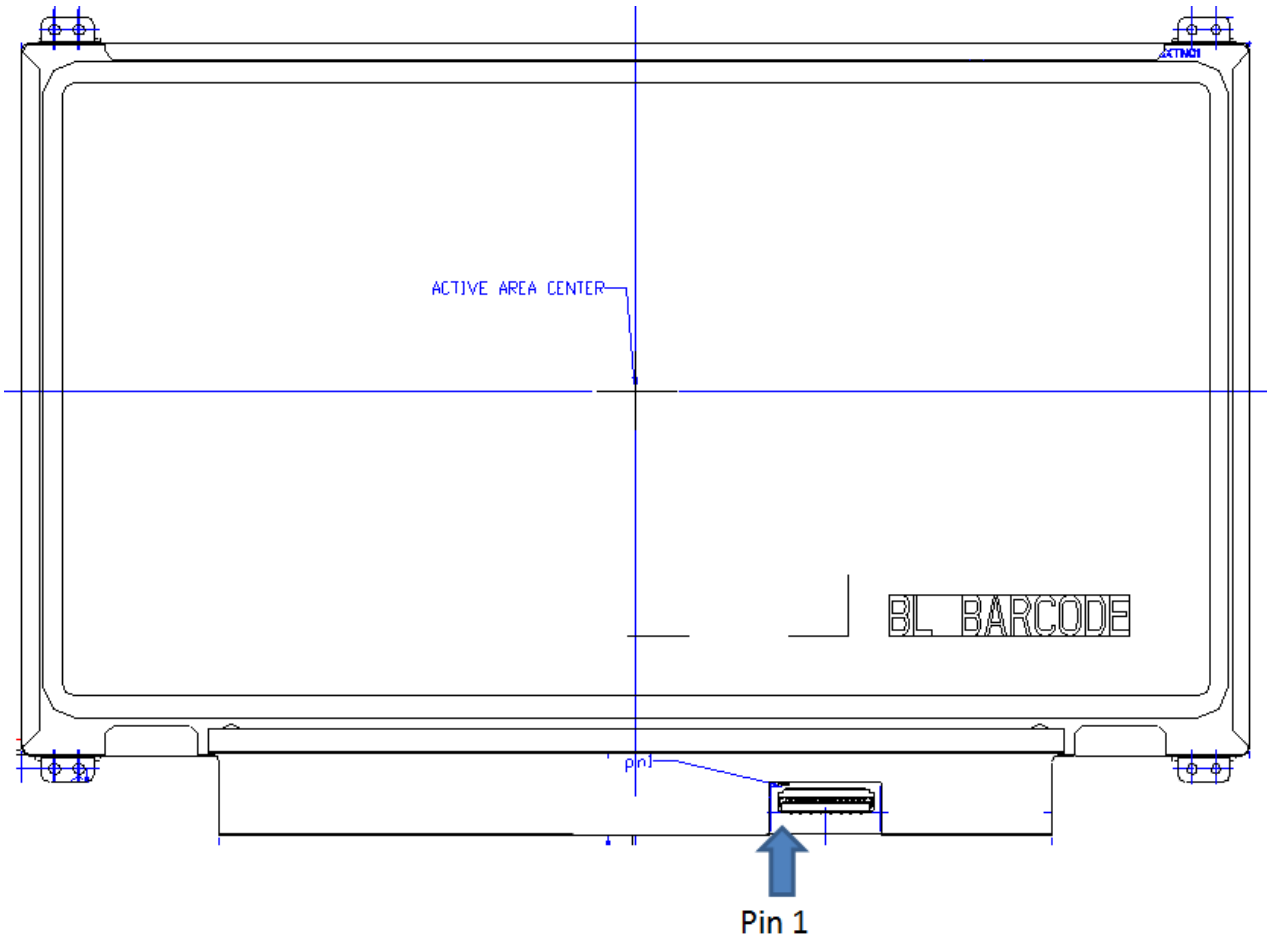

Note1: Start from Right side.
Note2: Input signals shall be low or High-impedance state when VDD is off.
Internal circuit of LVDS inputs are as following.

8. Reliability Test Criteria

Items	Required Condition	Note
Temperature Humidity Bias	40℃/90%,300 hours	
High Temperature Operation	60℃,300 hours	
Low Temperature Operation	-20℃,300 hours	
Hot Storage	70℃, 300 hours	
Cold Storage	-30℃, 300 hours	
Thermal Shock Test	-20℃/30 min ,60℃/30 min ,100cycles	
Shock Test (Non-Operating)	220G,2ms,Half-sine wave,(±X, ±Y, ±Z)	
Vibration Test (Non-Operating)	1.5G, 10~500Hz Random, 30 mins/axis (X, Y, Z)	
On/off test	On/10 sec, Off/10 sec, 30,000 cycles	
ESD	Contact Discharge: ± 8KV, 150pF(330Ω) 1sec, 8 points, 25 times/ point Air Discharge: ± 15KV, 150pF(330Ω) 1sec, 8 points, 25 times/ point	Note 1

Note1: According to EN61000-4-2, ESD class B: Some performance degradation allowed. No data lost Self-recoverable. No hardware failures.

Note 2:

- Water condensation is not allowed for each test items.
- Each test is done by new TFT-LCD module. Don't use the same TFT-LCD module repeatedly for reliability test.
- The reliability test is performed only to examine the TFT-LCD module capability.
- To inspect TFT-LCD module after reliability test, please store it at room temperature and room humidity for 24 hours at least in advance.
- No function failure occurs. Mura shall be ignored after high temperature reliability test.

9. Mechanical Characteristics

9.1 LCM Outline Dimension (Front View)

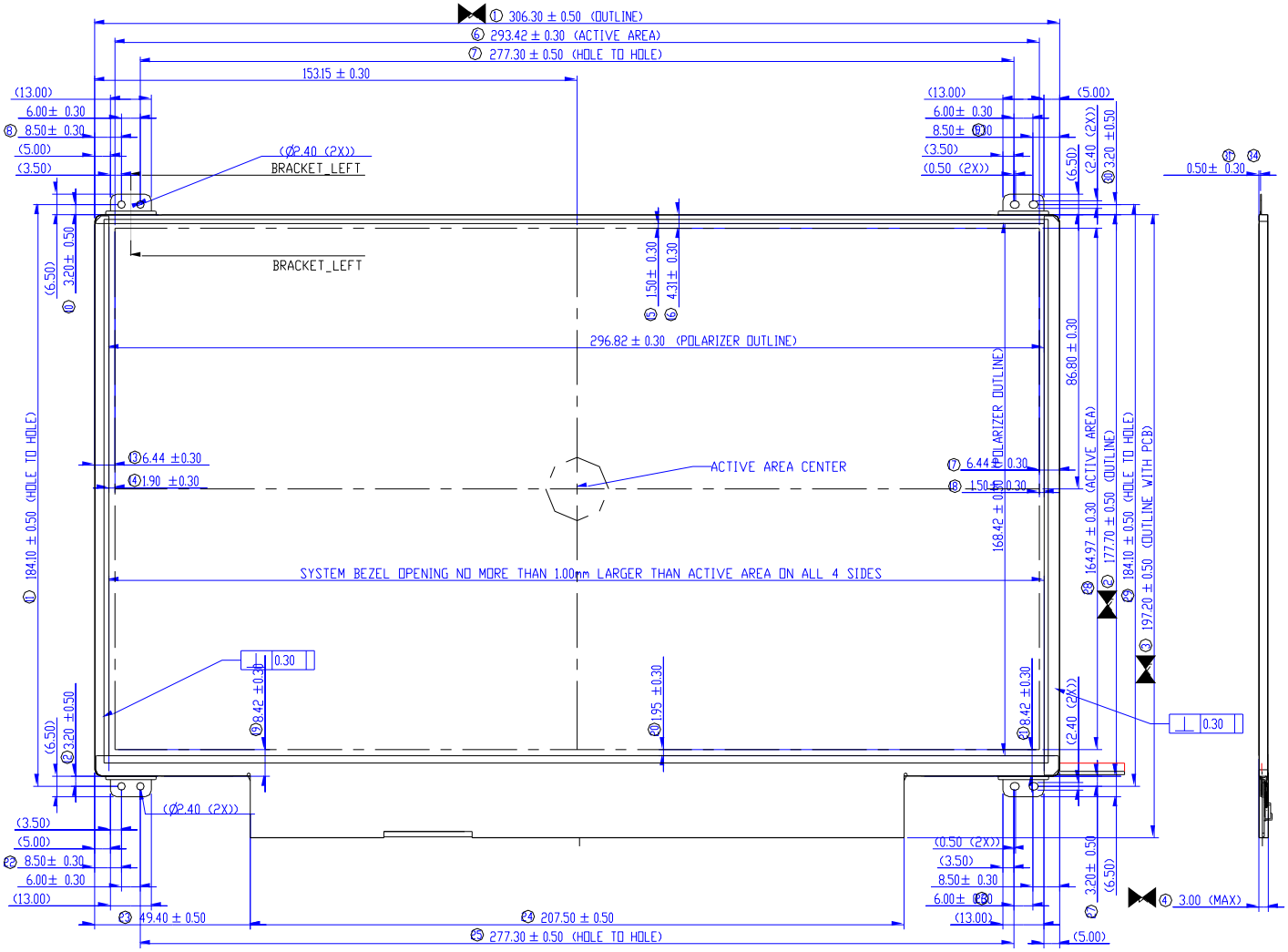

9.2 LCM Outline Dimension (Rear View)

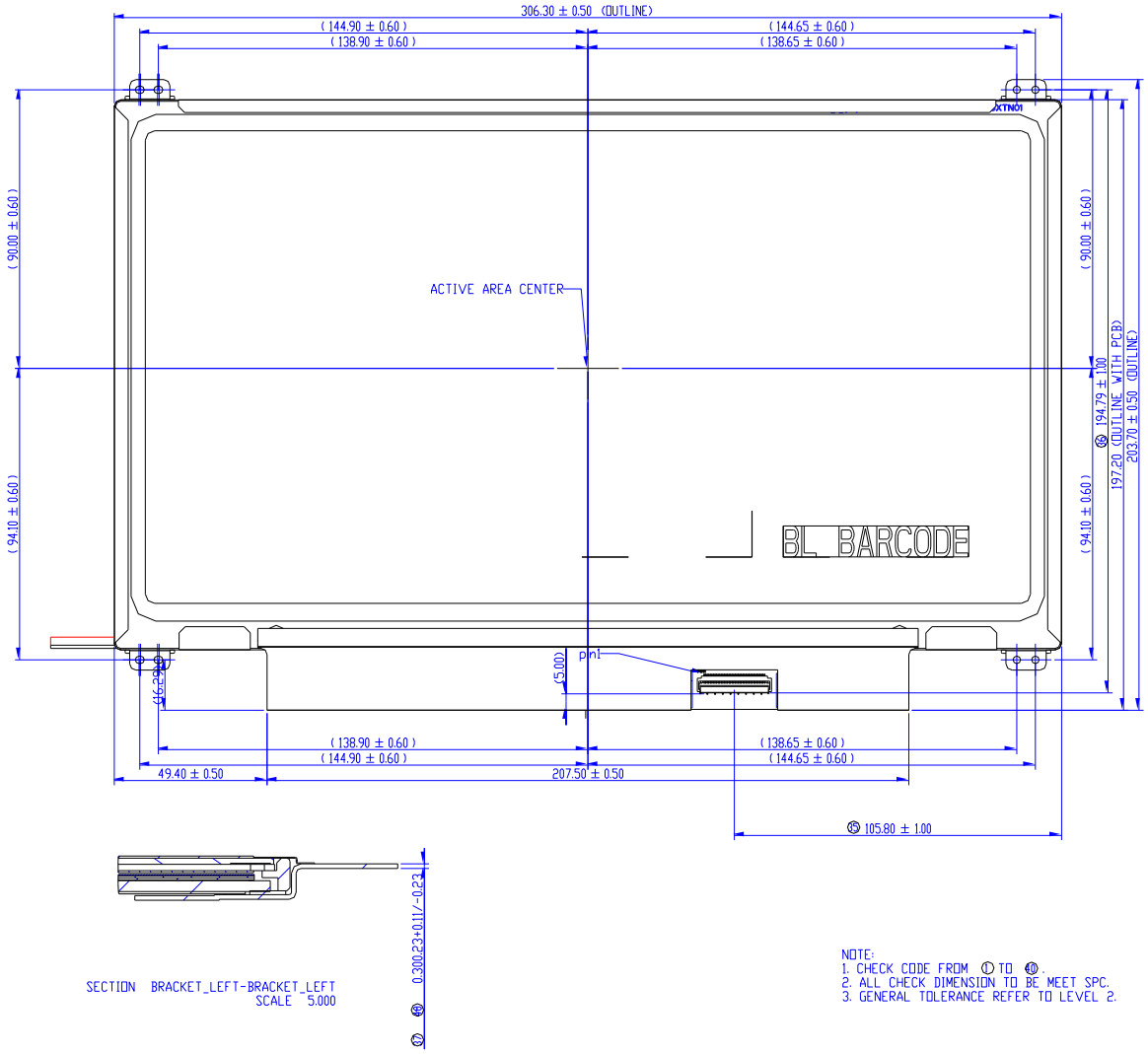

10. Label and Packaging

10.1 Shipping Label (on the rear side of TFT-LCD display)

10.2 Carton Package

Max capacity：45 TFT-LCD module per carton
Max weight: 10 kg per carton
Outside dimension of carton: 436mm(L)* 374mm(W)*273mm(H)
Pallet size： 1140 mm * 890 mm * 135mm

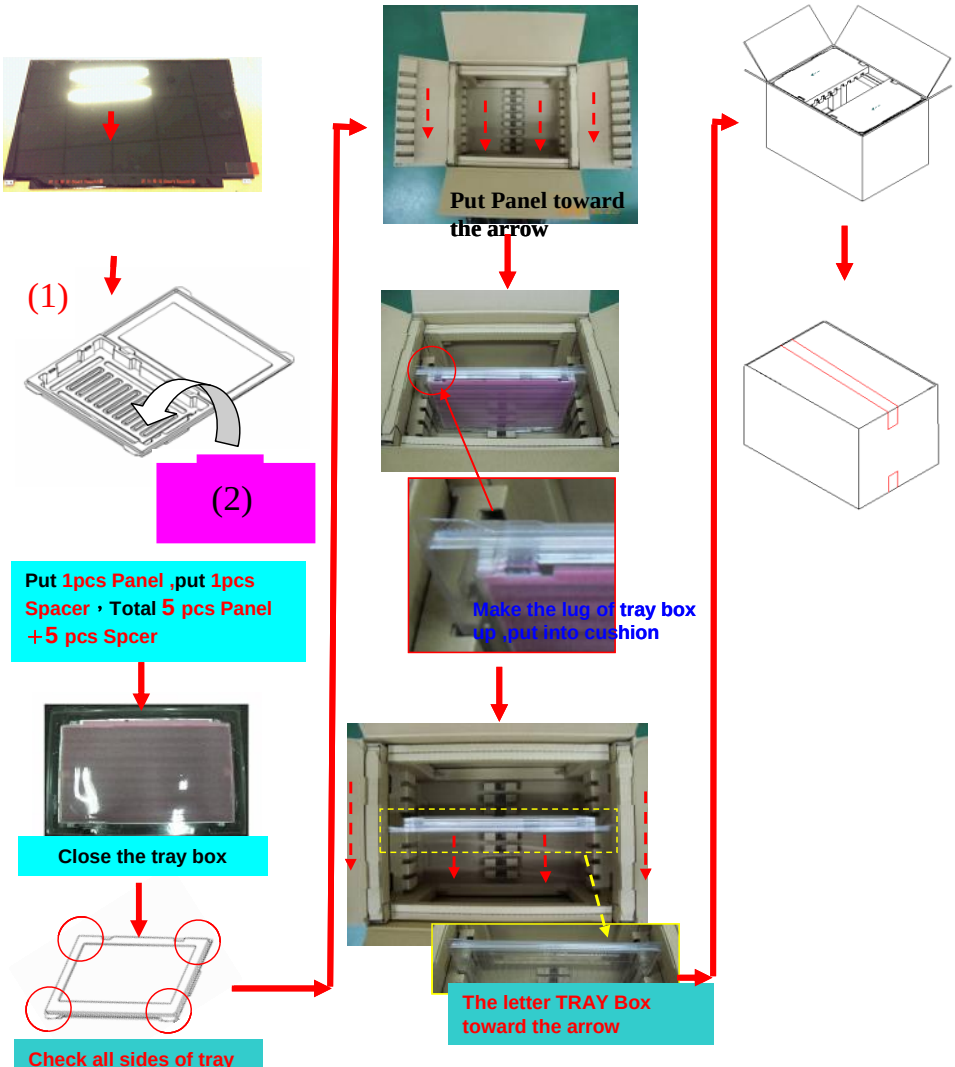

10.3 Palletizing

Module by air_Max: (2 *3) *5 layers，one pallet put 30 boxes，total 1350pcs module
Module by sea_Max: (2 *3) *5 layers + (2 *3) *1 layers , two pallet put 36 boxes，total 1620pcs module
Module by sea_HQ_Max: (2 *3) *5 layers+(2 *3) *3 layers, two pallet put48 boxes, total 2160pcs module